Public Disclosure Authorized

Public Disclosure Authorized

MENDERES GEOTHERMAL ELEKTRİK ÜRETİM A.Ş.

DORA-3 GEOTHERMAL POWER PLANT

ENVIRONMENTAL MANAGEMENT PLAN

January, 2012

TABLE OF CONTENTS

1. INTRODUCTION OF THE PROJECT

1.1 The Objective of the Proposed Sub-loan
1.2 The Sub-Project

2. ENVIRONMENTAL MANAGEMENT PLAN FOR THE GPP PROJECT

2.1 Mitigation Plan
2.2 Monitoring Plan
2.3 Implementation Plan

3. PROJECT SCHEDULE

4. PROCESS FLOW

5. PUBLIC CONSULTATION

6. APPENDIX

I.INTRODUCTION OF THE PROJECT

1.1 Objective of the Proposed Sub-loan	
1.1.1 Name of Beneficiary Enterprise:	MENDERES GEOTHERMAL ELEKTRİK ÜRETİM A.S.
1.1.2 Sub-loan Amount :	68.300.000.-USD (front-end fee included)
1.1.3 Purpose of the Project :	Construction of a geothermal power plant (GPP) with an installed capacity of 34 MWe (2 x 17 MWe) with an energy production of 220 GWh annually in AYDIN - TURKEY.
1.2.The Sub-Project	
1.2.1 Summary Investment Description*:	Menderes Geothermal Elektrik Uretim A.S. (MEGE) was established as a part of MB Holding A.S. in 1999 and obtained an Electricity Production License for DORA-3 GPP (EÜ/2709-12/1680) from the Energy Market Regulatory Authority (EMRA) on August 19th, 2010, which is valid until 02.08.2031. In recent years the usage of geothermal resources has increased rapidly in Turkey. Geothermal energy is one of the alternative renewable energy sources in the world. The geothermal energy does not lead to pollution; it is renewable, sustainable, local and environmentally friendly. The installed geothermal power has reached from 17 MWe in 2005 to 114.2 MWe at the end of 2011 in Turkey. An additional 279.77 MWe capacity has been licensed by the EMRA. MEGE is based on a 33 km^2 reserve basin in Aydin - Salavatli geothermal field and is the holder of a geothermal license for producing of geothermal energy in this licensed field (named as J-550 Salavatlı Geothermal Field). According to the reservoir modelling studies, Aydın Salavatli geothermal field has a potential installed capacity of approximately 100 MWe. MEGE's first project DORA-1 GPP, with an installed capacity of 7.95 MWe has been operating since 2006 and the second GPP, DORA-2 GPP, with an installed capacity of 9.5 MWe has been operating since 2010. After the construction of DORA-1 GPP, the reservoir pressures and the reservoir capacity were monitored during the operation period especially in first two years. An assessment for the new well locations for DORA-2 and DORA-3 GPPs were conducted by the experts from Istanbul Technical University, Izmir Dokuz Eylül University and also Izmir Institute of Technology. The reservoir characteristics were monitored from the wells drilled for DORA-2 GPP during the operation of DORA-1 GPP and currently the existing reservoir characteristics are also being

	monitored from the new drilled wells during the operation of DORA-1 and DORA-2 GPP. Currently, AS-5 and ASR-3 wells are used as monitoring wells. It was also noted that during the operation of DORA-1 and DORA-2 GPPs, no interference was observed between the existing production and reinjection wells. The construction activities of the proposed GPP, DORA-3, with a licensed capacity of 34 MWe (2 x 17 MWe) has been started in January 2011 with the drilling of the production and reinjection wells at the proposed well locations. The drilling of the production and the reinjection wells are planned to be completed in June 2012. In addition, the construction activities at the power house is planned to be started in February 2012. The investment area of the project site is about 137.395 m^2. The following areas are reserved in the project; • 21,000 m^2 for power plant building, • 400 m^2 for stock and warehouse of replacement and administrative building, and • 750 m^2 for installation of pits, pump stations, box, construction site, etc. All regulatory approvals and permits related to the project area were obtained and secured before the start of the construction works. DORA-3 has an installed capacity of 34 MWe (2 x 17 MWe) with an annual energy production of 220,000,000 kWh. There will be two units and each unit of the DORA-3 power plant is planned with two binary turbines and a single generator. Installed Power Generation Capacity : 34,000 kWe Inlet Consumption : 5,000 kWe Net Power Generation Capacity : 29,000 kWe Average Annual Power Generation Time : 8,700 hours Total Net Annual Power Generation for Sales :220,000,000 kWh The net electricity generation of the plant varies with the meteorological conditions and also with the performance of the designed air cooled condenser. Since the ambient temperature decreases during winter period, the efficiency of the air cooling unit increases and the generation performance of the plant reaches to its maximum efficiency. In the scope of DORA-3 GPP project, ten (10) geothermal wells, six (6) for production and four (4) for reinjection are planned to be installed. The drilling activities have been started in January, 2011. The drilling of six (6) production wells and two (2) reinjection wells have been completed as of January 2012. Approximately 10,000 meters for production wells and 6,500 meters for the re-injection

	wells are planned to be drilled in total. DORA-3 GPP will be operated with the AS-5, AS-6, AS-7, AS-8, AS-9, AS-10 production wells, which are between 1,300 m and 1,600 m in depth and the ASR-6, ASR-7, ASR-8 and ASR-9 re-injection wells, which are between 1,800 m and 2,200 m in depth. The location of DORA-1 GPP, DORA-2 GPP, proposed DORA-3 GPP and the production/reinjection wells are shown in Figure-1. During the operation period the temperature of the geothermal fluid that will be extracted from the production wells will reach to about 160 ^{0}C with a flow rate of 2,800 tons per hour. Due to the temperature of the geothermal fluid, Binary System Technology (O.R.C. Organic Rankine Cycle) will be applied. Geothermal fluid contains a brine, steam and NCG (non-condensable gases) mixture. DORA-3 GPP will save about 150,000 tons of CO_2 emission annually. The geothermal fluid, which reaches to the surface at 10 bars from the production wells, passes through a separator and is divided into hot water (brine) and steam. Geothermal fluid is then transferred to DORA-3 GPP. All pipelines are insulated to prevent the heat loss. Geothermal brine is accumulated into the accumulator tank and pumped into the system. Separated steam flows with its own pressure into the power station. The brine and steam are directed to the different heat-exchangers. Geothermal fluid transfers its heat to a secondary fluid, Pentane, in the heat-exchanger. The heated Pentane enables the turbines to turn at high speeds. Then, the generator, which is connected to the turbine with a shaft, generates the electrical energy. The geothermal and pentane systems run continuously as a closed circuit. Pentane, which turns into pressurized gas as it is heated, reaches to the air cooling system and returns into the liquid form and then is pumped back to the system. In this system, the geothermal fluid heats pentane in the evaporator and is released after completing its task. An air cooing system will be used in the scope of DORA-3 GPP. However, a limited amount of water for each production well (1-2 tons/day) will be used as cooling water at the production wells area. This amount will be supplied from the water network of Köşk, Salavatlı and Yavuzköy Districts. No water from Büyük Menderes River or groundwater will be used as cooling water in the scope of the project. The geothermal liquid, which transfers its heat to Pentane, drops to 75 ^{0}C and is sent to the re-injection wells by underground pipe lines and re-injected into the reservoir. The synchronization process produces electricity that is sent to the High Voltage interconnection network.

	The electrical power that is produced by the generator will be transformed from 11 kilovolts to high voltage (i.e. 154 kV) with a step-up transformer and will be connected to the national network by a 154 kV high voltage overhead energy transmission lines. The switchyard and the support units will be controlled with a SCADA system. Since the existing facilities were connected to the 31.5 kV national networks with an underground system, there is no switchyard (substation) at the project site. In the scope of DORA-3 GPP, a switchyard will be constructed at the project site. This switchyard will be connected to the 154 kV Aydın – Nazilli energy transmission line (ETL) from the Yavuzköy Some pylon that is located at the 18th km of the Aydın-Nazilli ETL. The location of the switchyard will be determined according to the location of DORA-3 GPP and the location of the ETL route, including the number and the location of the pylons, will be decided by TEIAS (Turkish Electricity Transmission Company) accordingly. Furthermore, a possible location of the switchyard and the 2.2 km long transmission route is given in Figure-2. The transmission route is located on the agricultural lands and these lands are planned to be acquired from the owners by mutual agreement. DORA-3 GPP will be an Integrated Two Level Units (ITLU) modular power plant comprised of all the equipment and controls required to convert the hot geothermal brine into electric power. The major components of the ITLU consist of pre-heaters, vaporizers, turbines, generator, lubrication and sealing systems, air-cooled condenser, and motive fluid cycle pumps. The module also includes automatic and manual control valves, instrumentation (gauges, switches and transmitters), internal piping, and power and control boards. Operation process of the ITLU is based on the Rankine cycle, in which an organic fluid absorbs heat from a heat source. This makes the motive fluid (Pentane) to vaporize; then expands in the turbine, producing rotational shaft power by transforming kinetic energy gained by the vapor's expansion process. In other words; the geothermal brine from the separators flows through the level 1 vaporizer tubes and then the brine plus steam from the separator enter the tube section of the level 1-2 pre-heater. The steam condensate is returned for reinjection while the brine flows to the level 2 vaporizer tubes. After the exit from the vaporizers the brine flows in parallel to the level 1 and level 2 tube sides of the pre-heaters and is then returned for reinjection, while organic fluid flows through the shell side. The organic motive fluid thermal cycle is a closed loop cycle.

	The motive fluid cycle of the two levels is totally independent. The ITLU enables the extraction of heat from the geothermal fluid in a simple and high efficient way without the complication of using mixtures of working fluids or operating in super critical cycles. The feed pumps pump the organic fluid from the condensers into the pre-heater(s) shell section. The fluid is heated in the pre-heater(s) to a temperature close to the boiling temperature and in the vaporizer the organic fluid reaches the boiling point and vaporizes. The organic vapor pentane passes through the demister, then enters the organic turbine and expands, thus dropping in pressure and temperature and producing rotational shaft power. From the exhaust of the turbine, the low-pressure vapor flows to air-cooled condensers, condenses and is then pumped back into the pre-heater(s). The organic motive fluid used in the thermal cycle is Pentane, selected for optimal utilization of available heat source. The most important issue after the test results is the calcium (Ca) concentration of the geothermal source. From well up to the end of valve bottom (spool), Ca concentration of the well fluids is 3 mg/lt however only 1.5 mg/lt of Ca come to the floodgates. The reason for this decrease in concentration is because a large proportion of Ca precipitates as they combine with CO_{32-} ions that are formed according to the following reaction $2HCO_3$----$H_2O + CO_{32-} + CO_2$ that the fluid becomes more and more basic after the flashing (2 phases) in the wells. Scaling can be prevented with the help of an appropriate inhibitor a type of anti-scalant. The starting point of scaling in the wells can be determined during inhibitor tests as well as with Kaliper or Go-devil tests. Scale inhibitor will be supplied from General Electrics Company as SCALETROL PDC9332. This additive is a deposit control agent used in process water systems. It contains highly stable organic phosphate and phosphonate that control fouling caused by suspended solids and precipitation of scaling ions. This chemical product is not classified as dangerous to the environment or health. The Material Safety Data Sheet is presented in the Appendix. During the operation period, an organic dye will also be used as a tracer to analyze and track the impact of the reinjection water to the production well. It is added to the reinjection wells during the reinjection process and it is monitored by the sampling from the production wells in every 6 hours during the operation period. The dye is used in very limited amount and the total amount of dye used during the operation is about 100 kg/year. The production and the reinjection wells are at least 1,200 meters depth in the project area. At these depths no impact is expected on surface ground waters. To prevention of leakage and contamination of the surface water and the groundwater, the wells are sealed by

	cement and cased by steel pipe named casing from the natural ground to the level of different depth for each well between 650 m and 1200 m below ground level. In case of a technical malfunction water that will be reinjected will be collected in a discharge pool and the accumulated water will be injected back into the reservoir after the plan operation is operational. The leakage is not discharged into the receiving environment on the surface. Detailed information about production and re-injection wells are given below; **The Coordinates of the Production Wells in UTM coordinate system** AS-5; Y=594599.36 - X=4191596.47 AS-6; Y=594624.84 - X=4191543.99 AS-7; Y=594618.10 - X=4191466.77 AS-8; Y=594643.59 - X=4191348.32 AS-9; Y=594685.57 - X=4191176.65 AS-10; Y=594262.74 - X=4191135.41 **The Coordinates of the Reinjection Wells in UTM coordinate system** ASR-6; Y=594324.96 - X=4190675.85 ASR-7; Y=594737.30 - X=4190727.58 ASR-8; Y=595002.69 - X=4190609.88 ASR-9; Y=594750.79 - X=4190565.64 A map, showing the location of the production wells, reinjection wells, the location of the existing DORA-1 and DORA-2 GPPs and the proposed DORA-3 GPP including the assumed Energy Transmission Line route, is given in Figure-2, attached to the end of this section of the report.

1.2.2 Location:	The project site is located at the J-550 coded Salavatlı Geothermal Area. The license field is located at the 26 km to Aydın Province, in Sultanhisar and Köşk Districts. The location of the existing DORA-1 GPP, DORA-2 GPP and existing production and reinjection wells including the proposed DORA-3 GPP, production and reinjection wells are shown in Figure-1.
1.2.3 Timetable:	The construction period of the plant was initiated with the start of the drilling activities in January 2011 and is planned to be completed in June 2012. The start of the DORA-3 GPP will be started in March 2012 and the commercial production of the first and the second units are planned to be started in May 2013 and November 2013, respectively.
1.2.4. Project (Location)	Salavatlı Geothermal Field is located about 26 km from Aydin Province. The activity area is located within the administrative borders of Kosk District. The facility area is located at 300 meters to the Aydin-Denizli highway. Geothermal Power Plant site is located at about 1,500 meters and 600 meters away from the southeast of Yavuzköy Village and northeast of Köşk District, respectively. Drinking water is supplied from a natural spring located about 10 km distance from Yavuzköy village. Water table is detected at 80-100 meters depth in the project area. Due to the chemical characteristics of the existing groundwater, it cannot be used for drinking purposes but used only for irrigation purposes. Groundwater temperature is about 30 - 35 ^{0}C and has a flowrate of about 5-6 lt/s. There is no groundwater well that is used for drinking or irrigation purposes in the project area. The irrigation water is brought from Büyük Menderes River by two irrigation channels, which are constructed on the surface and made of concrete. In the scope of the project, there is no intersection or intervention of the project locations or piping with these channels. The operation area consists of agricultural fields and fruit orchards. The geothermal power plant will work with a closed-circuit system. Therefore, the proposed geothermal power plant will not have any adverse environmental impact on the existing agricultural lands and orchards during its operation. The Project location is not in or adjacent to areas with important archaeological, historical and or cultural sites or other high environment, social or economic values such as National Parks, Nature Parks, Natural Monuments, Nature Protection Areas, Wild Animals Development Areas, Cultural Heritage, Natural Heritage, Sites, Protected Areas, Biogenetic Reserve Areas, Tourism Areas or Centers and other Protected Areas.

	Dilek Peninsula-Büyük Menderes Basin National Park is located between Kuşadası and Söke, where as towns of Aydın. The proposed Project area is located about 78,5 km away from the west of the park and therefore, the geothermal power plant will not have an adverse environmental impact on the park. The flora and fauna of the project region is prepared by expert biologists with the data acquired as a result of field studies and literature based studies. Flora and fauna related studies; Field works were carried out on the project area by expert biologists on March 5th-6th 2010. Amphibian, reptile, bird and mammal life were observed in the wildlife of the region. Their samples of nest, stools, foot print etc. were investigated. After then, identified plant samples in the field were diagnosed, observed for their tracks and wildlife members are classified. Floristic and faunistic scientific studies (literature studies) have been made within territory and nearby and all the data has been evaluated. **FLORA** The following publications were used for the detection of Flora: -P.H.DAVIS, “Flora of Turkey 1-10” -DONNER,J., “Verbreitungskarten Zu P.H.DAVIS “Flora of Turkey 1-9” -TUBİTAK, “Turkish Plants Data Service” As a result of field and literature studies, no endemic or threatened flora species was identified at the project site and its vicinity in accordance with the Bern Convention (Convention on the Conservation of European Wildlife and Natural Habitats) and “Red Data Book of Turkish Plants” which presents IUCN’s Red List Categories. It was observed that there are mountain tea, stinging nettle, fig, poplar, olive, orange, bitter orange, bitter vetch, clover, liverwort in activity area and around. **FAUNA** The following publications were used for the detection of Fauna: -DEMİRSOY, “Mammals”, “Amphibians” and “Reptiles” -DEMİRSOY, “General and Turkey Zoogeography” -KURU, “Vertebrates” -TÜBİTAK, “Turkey Vertebrate Species List” -C.S.ROSELAAR, “Taxonomy, morphology, and distribution of the Songbirds of Turkey: an atlas of biodiversity of Turkish passerine birds”

	-Environment Foundation of Turkey, “Turkey's wetlands” -Ministry of Environment,“ Bird paradises of Turkey” Society For The Protection Of Nature,“ Important Bird Areas in Turkey” As a result of field and literature studies, no endemic or threatened fauna species (amphibians, reptiles, birds and mammals) was identified at the project site and its vicinity in accordance with the Red Data Books, Bern Convention, IUCN Red List and Central Hunting Commission Decisions. There were non-endemic frog, snake, magpie, moles, foxes, and weasels at activity area and around.
1.2.5. Potential Impacts: **More information on anticipated environmental impacts of the project.**	Geothermal energy is one of the alternative and renewable energy resources; which has the potential to compete with fossil energy resources. The proposed geothermal power plant will be operated with a Binary System (O.R.C. Organic Rankine Cycle) technology and will be completely closed-circuit system. Geothermal fluid obtained from the wells will be pumped back to reservoir with re-injection wells to avoid potential damage to the environment. Geothermal fluid will not contact with the atmosphere during this process. During the operation period 99% natural CO_2 gas (raw gas) was formed. The CO_2 gas collected in a closed-circuit system in DORA-1 and DORA-2 GPP was sold to two industrial gas suppliers in Turkey, HABAS and LINDE. The CO_2 gas collected in DORA-3 GPP will either be sold to these gas suppliers or will be collected in the closed-circuit system and then will be directly re-injected to the underground with the re-injected geothermal water. All studies are complied with the provisions of the “Control of Industrial Air Pollution Regulations” published in Official Gazette, dated on July 03th, 2009 with Nr. 27277. Vegetative top soil will be stripped and stored separately on site. Then, it will be used during the rehabilitation of the project site after the construction is finished. The access roads will be sprayed with water by water trucks during the construction phase in the project area as a mitigation measure for potential dust emissions. Since the existing cadastral roads and village roads will be used, no new access road will be constructed in the scope of this project. The existing roads will be rehabilitated and widened where necessary. The lands that are required for the widening operations are all belong to the project owner. To prevent exhaust gas emissions, machines to be used will be provided as per new and quality state-of-the-art technology, and

	vehicle inspections and exhaust measurement of the construction equipment will be regularly executed. The oil change of the construction machines will be performed on an impermeable location at the construction site by a mechanic or a service expert. The waste oil will be collected in barrels and these barrels will be stored on an impervious place in a secondary containment, The daily, weekly and monthly maintenances of the machinery will be conducted regularly and oil leaks will be prevented by using drip pans. All provisions of “Control of Hazardous Wastes Regulation" issued in Official Gazette no. 25755 and dated March 14th, 2005 as well as all provisions of "Control of Waste Oil Regulation" that entered into force by being published in the Official Gazette no. 26952 and dated July 30th, 2008. Release of any type of waste into any receiving environment such as soil, sea, surface or groundwater will be absolutely prevented. Solid wastes, which are classified as recyclable (plastic, glass, paper, metal etc.) formed due to personnel to be employed during construction and operation phases, will be stored separately by considering their recyclability according to the “Solid Waste Control Regulation” that entered into force by being published in the Official Gazette no.20814 dated on March 14th 1991. Wastewaters that will result from the personnel working at construction and operation phases will be gathered in an impermeable cesspit in compliance with the provisions of the “Regulation on the Pits to be Built in Locations, where it is not possible to Construct Sewage Course”, which entered into force upon promulgation in the Official Gazette dated on March 19th 1971 and numbered 13783. A protocol will be signed with Köşk Municipality for the disposal of wastewater in the cesspit with a vacuum truck, regularly.. All construction machines will not be operated at the same time. The daily, weekly and monthly maintenances of the machinery will be conducted regularly. The construction works will take place during daytime between 07:00 and 19:00 hours. Local people will be notified in advance if there is any noise creating activity during construction. During the construction stage, precautions will be taken according to "The Control and Management of Noise Regulations" published in Official Gazette, dated on June 4th, 2010 with Nr. 27601. In order to prevent accidents that may occur during the construction and operation, specific occupational health and safety measures will be taken within the framework of the ISO 18001 OHSAS by the EPC contractor and operator. Geothermal fluid used for power production will be disposed of through re-injection for the sake of continuity of the geothermal

	system. The system is a closed cycle and the geothermal water will be transferring only its thermal energy. This geothermal water is not considered as waste water. For that reason geothermal fluid that is used in the power plant will be injected to the underground for feeding of the reservoir. The vehicles used in transporting construction materials will be covered. The work sites will be watered under warm, dry and windy weather conditions. In particular, water sprinkler systems will be used in crushing and seizing units in order to prevent dust. During the construction stage, precautions will be taken according to "The Control and Management of Noise Regulations" published in Official Gazette, dated on June 4th, 2010 with Nr. 27601. Under normal operational conditions, 100% of geothermal fluid will be injected into the reservoir. For the potential emergency situations, a “Discharge Pool” will be constructed in the facility area in order to maintain the production continuity in case of a technical malfunction that may occur in the system or in the reinjection wells that will prevent reinjection of the geothermal fluid. The volume of the discharge pool will be about 250 – 300 m^3 for emergencies will be constructed to store geothermal fluid. Then geothermal fluid will be pumped via an extra pump into the reinjection wells. Since the 100% of the extracted water should be re-injected back to the reservoir, this mode of operation has been made a legal obligation in several countries, where geothermal power is utilized. Although no endemic or threatened fauna species were identified at the project site and its vicinity, still there will be some impacts on fauna species during the land preparation and construction stages. During the stripping of the vegetation cover and excavation activities at the project site, a risk may arise for animals such as tortoises, hedgehogs, lizards and snakes which use soil for nesting. Therefore, visual controls will be carried out before stripping and fauna elements will be removed from these areas to similar habitats by appropriate means of methods. Besides, some fauna elements may leave their habitats as a result of noise or construction vehicle disturbance. However, all these impacts will occur on a limited area and time period. Also it is most likely that animals leaving their habitats will find similar habitats around. Therefore no significant adverse impact is expected to occur on fauna elements during the construction activities. In addition, drilled wells do not pose a risk to the fauna elements during the operation since as the wells are drilled, they are cemented and there will be drilling rig at the well heads. Therefore there will be no risk for the animals to fall into these drilled wells.
1.2.6.Activities Conducted	According to the 17 the article of the EIA Regulation, which came

	into force published in the Official Gazette with the number of 26939 and with the date of July 17th 2008, a Project Description Report was prepared and submitted to the Aydın Provincial Directorate of Environment and Forestry, and an "EIA is not Required" decision was obtained on April 16, 2010.
1.2.7.Cumulative Impact of the GPPs	DORA-1 GPP and DORA-2 GPP have been operated in J-550 Salavatlı Geothermal Field since 2006 and 2010, respectively. The proposed DORA-3 GPP is also planned to be constructed in the same geothermal field as shown in Figure-1. DORA-3 GPP is located about 860 m to Köşk Town and about 1,670 m to Yavuzköy Village. Since this proposed project will be the third GPP and there are two other geothermal power plant projects operating around the Project site, a limited cumulative impact assessment is performed by taking the other projects into consideration in order to predict whether there will be any additional impacts at the nearest settlements associated with the other projects. The cumulative impacts of DORA-3 GPP and other two projects are evaluated based on the distances between each project. Since DORA-3 GPP is located far away from DORA-2 GPP (about 1,480 m) and DORA-1 GPP (about 2,690 m); it can be stated that there will be no additional impact on the settlements around the each existing project. In addition, the closest residential area to the existing and the proposed plants is Yavuzköy Village, which is located about 1,120 m to DORA-1, about 890 m to DORA-2 and about 1,670 m to DORA-3. Therefore, a cumulative noise impact assessment is considered in order to estimate whether the cumulative noise levels at Yavuzköy Village comply both Turkish RAMEN limits and IFC/WB Guidelines. According to the noise measurements given in the "Noise Monitoring Report" prepared for DORA-2 GPP in March 2010; the noise levels measured at the fence of the plant (Leq) was recorded as 64.4 dBA, 61.9 dBA and 57.7 dBA during daytime, eveningtime and nighttime, respectively. Due to the distance between Yavuzköy and the existing and the proposed geothermal power plants; about 1,120 m to DORA-1, 890 m to DORA-2 and 1,670 m to DORA-3; the cumulative noise impact of these three plants at Yavuzköy Village is calculated as 12 dBA and the noise levels during construction and operation phase comply with both the Turkish noise regulation limits and IFC/WB Guidelines.

THE NOISE IMPACT ASSESSMENT OF DORA-3 GPP

Construction Phase

Construction inevitably creates some degree of noise emissions at locations in close vicinity of the construction activities. However, construction noise is temporary and transient in nature. The noise levels generated by construction works would have the potential to impact on noise sensitive receptors. Noise levels during construction at a receptor depends on several factors such as number and type of equipment and machinery used, the distance between noise sensitive receptor and the construction site and level of attenuation likely due to ground absorption, air absorption and barrier effects. AECOM assumes that typical number and type of construction equipments will be used during construction activities and their total equivalent noise level generated by all noise sources is estimated as 110 dBA (i.e. Backhoe loader, Dumper truck, Dozer and Digger).

In order to assess the noise impacts of construction activities, the noise sensitive receptors (NSR) are selected as Köşk Town and Yavuzköy Village, which are located with a distance of 860 m and 1670 m, respectively.

Air absorption is assumed as 0 in order to simulate worst case situation, and thus, the following formula (RAMEN, Annex-I) is used to calculate the noise levels of construction works at the noise sensitive receptor;

$$L_P = L_{eq} + 10 \times \log\left(\frac{Q}{4.\pi.r^2}\right)$$

where;

Lp: Noise power level at the receptor (dBA);
Q: ground absorption coefficient (assumed as 1);
r: distance between the source and the receptor.

The noise levels at different distances are calculated using the above formula and the results are given in Table-1, below.

Table -1 Noise Levels at NSR and Different Distances

Distance (m)	Lp (dBA)
50	65
100	59
200	53
300	49.5
400	47
500	45
870 (NSR-1, Köşk Town)	**40**
1000	39
1500	35.5
1670 (NSR-2, Yavuzköy Village)	***34.5***
2000	33

As can be seen in Table-1, the noise level generated during the construction activities at the NSR is calculated as 34.5 dBA and the noise levels during construction phase comply with both the Turkish noise regulation limits and IFC/WB Guidelines.

THE CUMULATIVE NOISE IMPACT ASSESSMENT OF DORA-1, DORA-2 and DORA-3 GPPs

Operation Phase

According to the noise measurements given in the "Noise Monitoring Report" prepared for DORA-2 GPP in March 2010; the noise levels measured at the fence of the plant was recorded as 64.4 dBA, 61.9 dBA and 57.7 dBA during daytime, eveningtime and nighttime, respectively. Thus, in order to assess the cumulative noise impact at the NSR, Yavuzköy, AECOM assumes that the noise level at DORA-1, DORA-2 and DORA-3 GPP will be the recorded noise level during daytime at DORA-2 facility (64.4 dBA).

Due to the distance of the GPPs to the NSR, (*about 1,120 m to DORA-1, 890 m to DORA-2 and 1,670 m to DORA-3***)** the predicted noise levels for each GPP and also the cumulative noise impact of all GPPs at the NSR will be negligible. As a summary, this noise assessment study has demonstrated that the noise level during the construction and the operation phase of DORA-3 GPP will not exceed the Turkish noise regulation and IFC/WB daytime and nighttime noise limits.

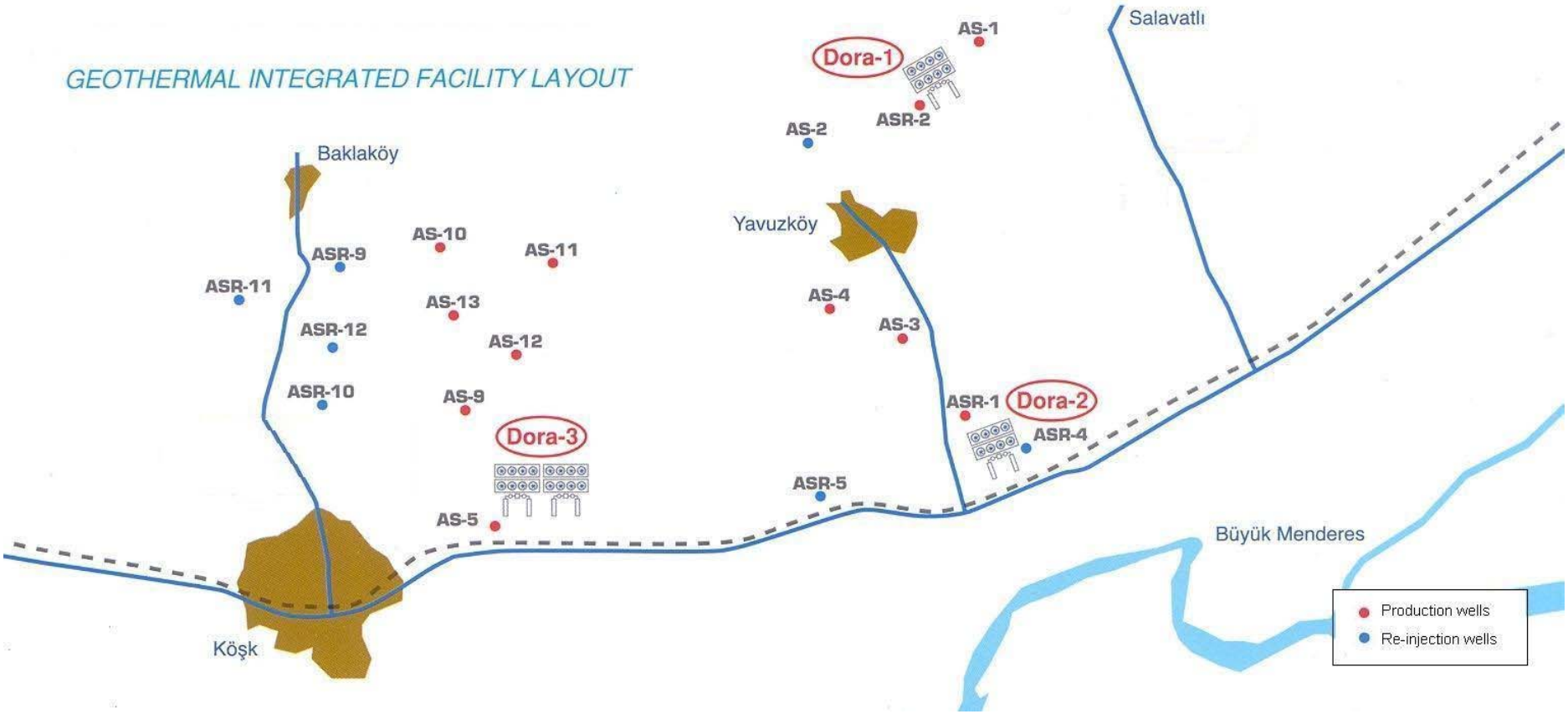

Figure-1. Geothermal Projects in J-550 Salavatlı Geothermal Field

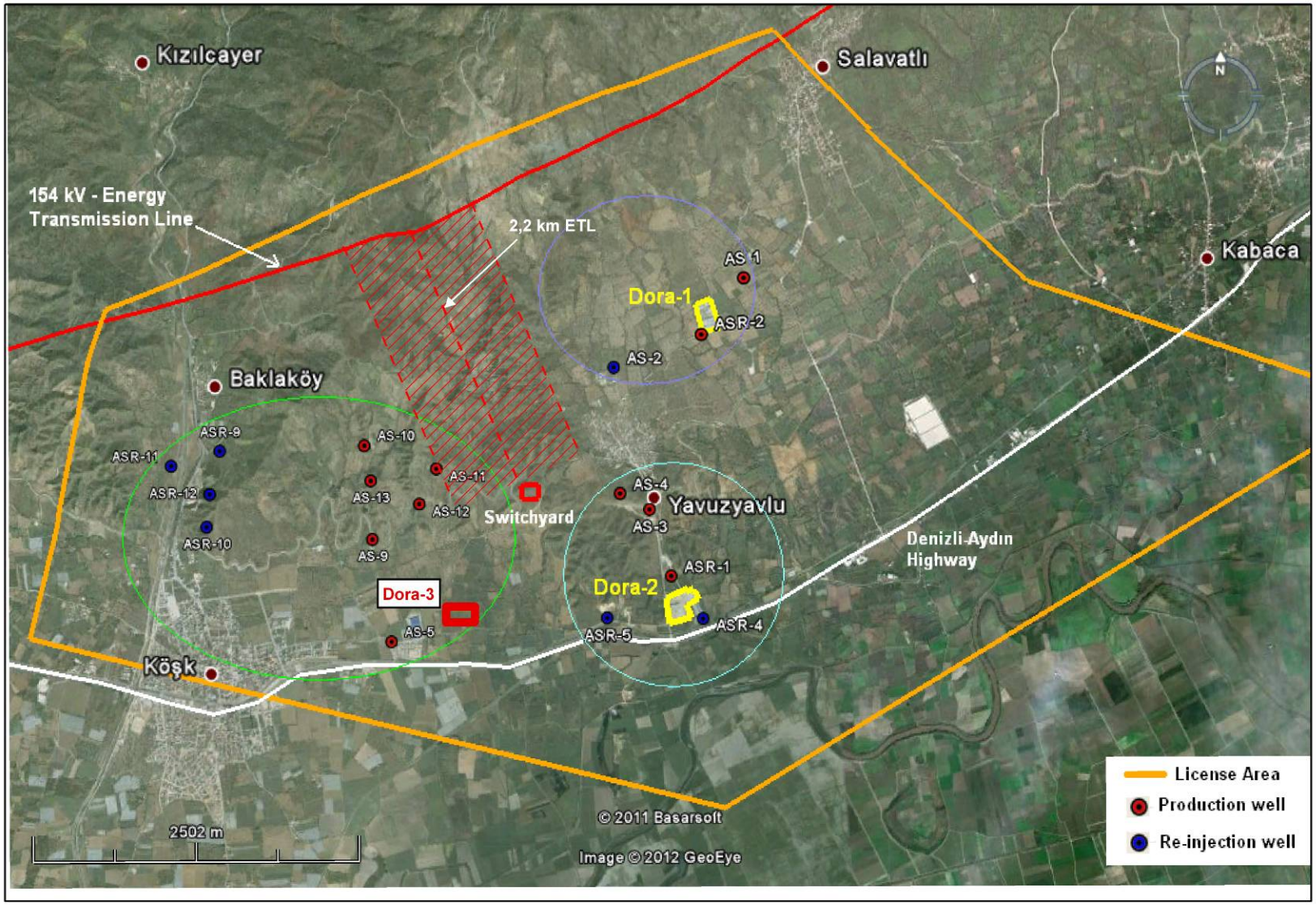

Figure-2 Project Locations (DORA-3 and assumed ETL Route)

2. ENVIRONMENTAL MANAGEMENT PLAN FOR DORA-3 GPP PROJECT

2.1 MITIGATION PLAN

This section of the report determines the steps required for ensuring conformity with the Turkish Environmental Regulation during to planning, construction and operation stages of the proposed project.

Phase	Issue	Mitigating Measure	Responsibility*
Planning (Land Preparation and Pre-Construction)	Admission	Project area was acquired by mutual agreement. "EIA is not Required" decision was obtained in accordance with the EIA Regulation. Production license was obtained. Construction Permission was taken.	Project Owner Aydın Provincial Directorate of Environment and Forestry EMRA Aydın Governorship, Special Provincial Administration
Construction	Solid and liquid wastes generated from well drilling (drilling mud and cuttings)	Drilling mud and cuttings from the well drilling will be separated and drilling mud will be reused as much as possible. Waste mud will be disposed according to its chemical content, whether it is hazardous or not, it will be disposed in accordance with Hazardous Wastes Control Regulation (Official Gazette No. 25755 dated March 14, 2005) or Solid Wastes Control Regulation (Official Gazette No. 20814 dated March 14, 1991). Cuttings will be washed and disposed in landfills approved by the local municipality in accordance with the Landfills Regulation (Official Gazette No. 27533 dated March 26, 2010). All other solid and liquid wastes generated during construction will be collected in the impermeable containers and septic tanks transferred by the relevant Köşk Municipality periodically according to the "Water Pollution Control Regulation" (Official Gazette No. 25687 dated December 31st 2004), "Solid Wastes Control Regulation" (Official Gazette No. 20814 dated March 14th, 1991) and "Excavation, Construction and Debris Wastes Control Regulation" (Official Gazette No. 25406	Project Owner

Phase	Issue	Mitigating Measure	Responsibility*
Construction		dated March 18th, 2004). The excavation work based drilling waste disposal will be disposed by the Köşk Municipality.	
	Groundwater contamination during drilling process	To prevent the leakage and contamination of surface water and groundwater, wells will be sealed by cement and cased by steel pipe. In case of a technical malfunction, water will be collected in discharge pool and the accumulated water shall be injected into the system once again. The leakage will not be discharged into the receiving environment. The ground water will not be contaminated due to these mitigation measures and any contamination of groundwater is not allowed according to the Law on Groundwater published in Official Gazette dated December 23th, 1960 with Nr.10688.	Project Owner
	Geothermal water and dissolved gases intrusion to the surface during drilling	The geothermal power plant will be operated with a Binary System (O.R.C. Organic Rankine Cycle) technology and completely closed-circuit system. A totally-closed circuit system will be used in the planned geothermal power plant. The CO_2 gas (raw gas) produced within the close circuit system will be directly re-injected back to the ground or all of this raw gas shall be disposed, according to a contract to be executed, by allocation and delivery via a distribution pipeline in accordance with the demands of the relevant companies present at the region without any treatment.	Project Owner
	Traffic interruption during surface pipeline (heat transmission / distribution) construction	A traffic management plan will be prepared. The plan will be reviewed and approved by the relevant Municipal authorities.	Project Owner

Phase	Issue	Mitigating Measure	Responsibility*
Construction	Damaging of soil, vegetation and road surfaces by movement of drilling equipment during exploration and development, including the construction of the switchyard and the energy transmission line (ETL)	There will not be any new access road construction within the scope of the project since there are existing roads already used to access the agricultural lands (fields, orchards, etc.). These existing roads will be used. These roads will be widened or rehabilitated where needed. If there is a need for road widening/rehabilitation on the existing roads, the loss of agricultural lands and cutting trees will be avoided. Also construction vehicles used for road widening/rehabilitation will not be allowed to pass through the surrounding agricultural lands so that the impact on the agricultural soil and the existing vegetation will be prevented. Exploratory drilling will be performed during non-growing period when agricultural activities are minimal (autumn, winter). Before starting the excavation work, the top soil will be stripped and used for the rehabilitation of the area. The main environmental impact during the construction of the switchyard and the ETL will be the habitat alteration due to land preparation and excavation activities at the switchyard and the pylon locations. Since the ETL is relatively short (nearly 2.2 km) and located on agricultural lands where no endemic or threatened flora species were determined in the project area, the potential environmental impact on the existing vegetation will be limited. In addition, there is no natural habitat of significant interest or natural migration pattern along the ETL route and at the proposed switchyard area. Therefore, no adverse impact is expected to occur on the natural habitat during the construction of switchyard and the ETL. Although no endemic or threatened fauna species were identified at the project site and its vicinity, there will be still some impacts on fauna species during the land preparation and construction stages. During the stripping of the vegetation cover and excavation activities at the project site, a risk may arise for animals such as tortoises, hedgehogs, lizards and snakes which use soil for nesting. Therefore, visual controls will be carried out before stripping and fauna elements will be removed from these areas to similar habitats by appropriate means of methods. Besides, some fauna elements may leave their habitats as a result of noise or	Project Owner

Phase	Issue	Mitigating Measure	Responsibility*
		construction vehicle disturbance. However, all these impacts will occur on a limited area and time period. Also it is most likely that animals leaving their habitats will find similar habitats around. Therefore no adverse impact is expected to occur on fauna elements during the construction activities.	
	Natural habitat destruction during surface pipeline construction	Since the power plant will be constructed as close as possible to the drilling wells, the pipeline route will not cover large amount of area. Therefore natural habitat destruction will be limited for surface pipeline construction. In addition, according to the flora and fauna studies, there is no natural habitat of significant interest or natural migration pattern within the pipeline route. Therefore there will be no adverse impact on natural habitat during surface pipeline construction.	Project Owner
Construction	Natural habitat destruction from extraction and or re-injection well siting	According to the results of the ecological survey, there are no natural habitats of significant interest or natural migration pattern in the well locations. All measures regarding the drilling works that may cause environmental impacts will be taken. During the field works, flora and fauna studies, no endemic or threatened species were identified at the project site and its vicinity. Although no endemic or threatened fauna species were identified at the project site and its vicinity, there will be still some impacts on fauna species during the land preparation and construction stages. During the stripping of the vegetation cover and excavation activities at the project site, a risk may arise for animals such as tortoises, hedgehogs, lizards and snakes which use soil for nesting. Therefore, visual controls will be carried out before stripping and fauna elements will be removed from these areas to similar habitats by appropriate means of methods. Besides, some fauna elements may leave their habitats as a result of noise or	Project Owner

Phase	Issue	Mitigating Measure	Responsibility*
Construction		construction vehicle disturbance. However, all these impacts will occur on a limited area and time period. Also it is most likely that animals leaving their habitats will find similar habitats around. Therefore no adverse impact is expected to occur on fauna elements during the construction activities. In addition, drilled wells do not pose a risk to the fauna elements during the construction since as the wells are drilled, they are cemented and there will be drilling rig at the well heads. Therefore there will be no risk for the animals to fall into these drilled wells.	
	Solid and liquid wastes accumulation from construction crews.	Solid and liquid wastes generated during the construction period will be collected in the impermeable containers and septic tanks are transferred by the relevant municipality periodically according to the "Water Pollution Control Regulation" (Official Gazette No. 25687 dated December 31st 2004), "Solid Wastes Control Regulation" (Official Gazette No. 20814 dated March 14th, 1991) and "Excavation, Construction and Debris Wastes Control Regulation" (Official Gazette No. 25406 dated March 18th, 2004).	Project Owner
	Accidental discharge of geothermal waters to surface waters during production testing	At the operation phase of the project, a "Discharge Pool" will be constructed in the facility area in order to maintain the production continuity in case of a technical malfunction that may occur in the system or in the re-injection wells. A discharge pool with 10m x 15m size for emergencies will be constructed and geothermal fluid stored here. Then geothermal fluid will be pumped to the re-injection wells. The water that needs to be re-injected in case of a malfunction in the re-injection system will be gathered in this pool and the accumulated water will be injected into the system once again. This mode of operation has been made a legal obligation in several countries where geothermal power is utilized. Also cooling water will be supplied from municipal water system of mainly Köşk District, Salavatlı Town and Yavuzköy Village. Therefore there will be no impact on surface waters due to cooling water supply. In addition, there will be no surface discharge of geothermal fluid.	Project Owner

Phase	Issue	Mitigating Measure	Responsibility*
Construction	Noise	All construction machines will not be operated at the same time. The daily, weekly and monthly maintenances of the machinery shall be conducted regularly. Local people will be notified in advance. During the construction stage, precautions will be taken according to the Regulation on Assessment and Management of Environmental Noise (Official Gazette No. 27601 dated June 4, 2010). Construction machines maintenance will be made on a regular basis. The construction work will take place between 07:00 and 19:00 hours.	Project Owner
	Dust	The vehicles used in transporting construction materials will be covered. Construction sites will be watered with sprinkler systems particularly during dry and windy weather conditions in order to prevent dust generation. To prevent adverse impacts of air pollutants generated by vehicles and machines, precautions will be taken according to Industrial Air Pollution Control Regulation (Official Gazette No. 27277 dated July 3, 2009).	Project Owner
	Exhaust	To prevent the adverse impacts of exhaust gas emissions, machines will be provided with new and quality state-of-the-art technology. Vehicle inspections and exhaust measurement of the construction equipment will be regularly carried out.	Project Owner
	Waste Oils Generated by Equipment and Trucks	The oil change of vehicles will be performed on an impermeable surface at the construction site by an expert mechanic or service personnel, and waste oil will be collected in barrels during oil change process and thus contamination of soil due to mineral oil shall be prevented. The daily, weekly and monthly maintenances of the machinery will be conducted regularly and oil leaks shall be prevented. All provisions of “Hazardous Wastes Control Regulation" (Official Gazette No. 25755 and dated March 14th, 2005) as well as all provisions of "Waste Oil Control Regulation" (Official Gazette No. 26952 and dated July 30th, 2008) will be followed during maintenance and oil changes of construction machinery and transportation vehicles. Release of solid wasted into any receiving environment such as soil, sea,	Project Owner

Phase	Issue	Mitigating Measure	Responsibility*
		surface or ground water will be absolutely prevented.	
	Cultural properties	There are no cultural and archeological resources at the project site and its vicinity. If any cultural and archeological resources are found in and nearby of the surrounding area, the construction will be immediately stopped and Province Administration of Culture and Tourism will be informed. Cultural and archeological resources that might be found during construction will be protected. All works related with construction will continue after approval is obtained from the Province Administration of Culture and Tourism.	Project Owner
Operation	Accidental leaks of production waters	Pressure valves will be used for leak detection.	Project Owner
		At the operation phase of the project, a "Discharge Pool" will be constructed in the facility area in order to maintain the production continuity in case of a technical malfunction that may occur in the system or in the re-injection wells. The discharge pool will cover an area of 150 meter squares with 10 m x 15 m dimensions. The water that needs to be re-injected in case of a malfunction in the re-injection system will be gathered in this pool and the accumulated water will be injected into the system once again. This mode of operation has been made a legal obligation in several countries where geothermal power is utilized. In case of a failure at the operation phase of the re-injection, generation will be halted in the power generation plant and thermal waters will be transferred to the Discharge Pool until the repair is completed. If the repair is not possible, then generation will be stopped in order to prevent the pollution of ground waters.	Project Owner
	Noise	The nearest residential units to DORA-3 GPP are Köşk Town and Yavuzköy Villages with a distance of 860 m and 1670 m, respectively. During the operation phase, the predicted noise levels at these NSRs will be negligible due to the distance and the estimated noise levels at DORA-3 GPP with respect to the noise level measurements carried out for DORA-2 plant. The detailed calculation of the noise impact is given in the report section.	Project Owner

Phase	Issue	Mitigating Measure	Responsibility*
Operation	Release of dissolved hydrogen sulfide gas	Geothermal fluid obtained from the wells will be sent with re-injection wells. Thus a circulation is created. Geothermal fluid will not contact with the atmosphere during this process. As a result of this circulation H_2S does not interfere into the atmosphere. All studies are complied with the provisions of the Industrial Air Pollution Control Regulation (Official Gazette No. 27277 dated July 3, 2009).	Project Owner
	Water pollution from cooled geothermal fluid effluents	The geothermal power plant will be operated with a Binary System (O.R.C. Organic Rankine Cycle) technology and completely closed-circuit system. Cooled geothermal fluid will be re-injected through this system to underground. Thus, the circulation will continue.	Project Owner
	Worker health and safety-exposure to hydrogen sulfide (H_2S)	H_2S detection systems will be installed at locations where release is possible. An approved emergency plan will be prepared and distributed to the relevant authorities. Enclosed facilities will be designed for adequate ventilation. Workers will be trained about the dangers of hydrogen sulphide once a month by experts. To prevent accidents that may occur during the operation, specific occupational health and safety measures will be taken within the framework of the ISO 18001 OHSAS.	Project Owner
	Occupational Health and Safety		

In conclusion, through the specification of the measures required to minimize the potential negative effects of the proposed project are mentioned above, it is estimated that the activities to be carried out within the framework of the proposed project will not expected to have any significant negative impact on the environment.

2.2. MONITORING PLAN

This section of the report includes the “Monitoring Plan” that establishes the monitoring stages required to ensure conformity with the principles and procedures laid down in the national environmental legislation during the planning/project design, construction and operation activities of the project.

Stage	Monitoring Parameter		Place of Parameter	Method of Monitoring	Sequence of Monitoring	Reason of Monitoring	Institutional Responsibility
Land Preparation and Pre-Construction	Admission	Condition of property	Drilling areas and Project area	Acquisition	Pre-Construction	Property	Project Owner
		License acquisition	Project area	Written permission	Pre-Construction	Production license and approval of licensing procedures obtaining from EMRA	Project owner, Energy Market Regulatory Authority (EMRA)
		EIA Permission	Operation areas and its surroundings	Written permission	Pre-Construction	EIA Not Necessary Decision was taken within the scope of the EIA Regulations in force	Project owner, Aydın Provincial Directorate of Environment and Forestry
		Construction permission	Project area	Written permission	Pre-Construction	Getting required permissions from related authority before activities	Project owner, Aydın Governorship Special Provincial Administration

Stage	Monitoring Parameter	Place of Monitoring	Method of Monitoring	Sequence of Monitoring	Reason of Monitoring	Institutional Responsibility
Construction	Solid and liquid wastes generated from well drilling (drilling mud and cuttings)	Well drilling sites	Visual inspection	Daily	Protection of soil and surface waters	Project Owner
	Steel casings and cement used in the drill holes	Well drilling sites	Visual inspection	Daily during drilling	To prevent groundwater contamination during drilling process	Project Owner
	Geothermal water and dissolved gases during drilling	Well drilling sites	Visual inspection	Daily	To prevent geothermal water and dissolved gases intrusion to the surface during drilling	Project Owner
	Traffic during surface pipeline construction	Roads near construction, and drilling activities	Visual inspection through a traffic management plan	Daily	To prevent traffic interruption	Project Owner
	Soil and vegetation condition during movement of drilling equipment	At construction site and along access routes	Visual inspection	Weekly	To prevent soil and vegetation damage	Project Owner

Stage	Monitoring Parameter	Place of Monitoring	Method of Monitoring	Sequence of Monitoring	Reason of Monitoring	Institutional Responsibility
Construction	Condition of natural habitat during surface pipeline construction and well siting	- Along proposed pipeline route and access roads - At and near site extraction and re-injection wells	Visual inspection	Prior and during any pipeline construction and well drilling	To prevent natural habitat destruction	Field ecologist and Project Owner
	Condition of natural habitat during construction of switchyard and energy transmission line (ETL)	- Switchyard area - ETL route	Visual inspection	Weekly	To prevent natural habitat destruction	Project Owner
	Solid wastes from construction crews	Construction site temporary disposal site, waste containers	Visual inspection	Daily	To prevent soil pollution, health concerns	Project owner Kosk Municipality
	Excavation wastes	Construction site	Visual inspection	Weekly	To prevent soil and surface waters pollution, adverse impact on natural habitat	Project owner Kosk Municipality
	Domestic wastewater	Septic tanks	Visual inspection	Monthly	To prevent soil and groundwater pollution	Project owner Kosk Municipality

Stage	Monitoring Parameter	Place of Monitoring	Method of Monitoring	Sequence of Monitoring	Reason of Monitoring	Institutional Responsibility
	Waste oils	Construction equipment, trucks	Visual inspection	Monthly	To prevent soil and groundwater pollution	Project Owner
Construction	Surface water quality (proper functioning of Discharge Pool)	At the location of Discharge Pool	Visual inspection	Weekly	To prevent accidental discharge of geothermal waters to surface water	Project Owner
	Noise	Construction and drilling sites, vehicle routes	Audio, consultation with local residents	Upon complaints	For community health concerns	Project Owner
	Air quality (dust, exhaust gases)	Roads, settlements near the project area	Visual inspection	Daily, more frequently during dusty and windy conditions and upon complaint	For local air quality and community health concerns	Project Owner
		Construction equipment exhausts	Exhaust measuring instruments	Periodical		

Stage	Monitoring Parameter	Place of Monitoring	Method of Monitoring	Sequence of Monitoring	Reason of Monitoring	Institutional Responsibility
	Cultural assets	Construction and drilling sites	Visual inspection	During excavation works	To prevent any damage to historical and cultural assets	Project Owner
Construction	Occupational Health and Safety	Whole project area	Visual inspection and audit	Daily	For health and safety of construction personnel	Project Owner
	Admission Procedures	Project Area	with written permission	After the completion of the construction work	Admission processes	Project Owner, General Directorate of Electrical Power Resources Survey & Development Administration

Stage	Monitoring Parameter	Place of Monitoring	Method of Monitoring	Sequence of Monitoring	Reason of Monitoring	Institutional Responsibility
Operation	Proper functioning of Discharge Pool	At the location of Discharge Pool	Visual inspection	Weekly	To prevent accidental leaks of production waters	Project Owner
	Noise	Production and reinjection pumps, air compressors	with sound level meters	Monthly or upon complaints by local residents	For occupational and community health concerns	Project Owner
	H_2S level	Work area, particularly where H2S can accumulate	H_2S detection systems	Weekly	To prevent exposure of H_2S for workers	Project Owner
	Occupational Health and Safety	Whole project area	Visual inspection and internal audit	Daily	For occupational health and safety concerns	Project Owner
Operation	Geothermal fluid	Drilling area and power plant area	Visual inspection	Continuous	Sustainability of geothermal fluid supply.	Project Owner
	Waste oils	Construction equipment, trucks	Visual inspection	Periodical	To prevent soil and groundwater pollution	Project Owner
	Solid wastes and packaging wastes	Project area	Visual inspection	Daily	To prevent soil pollution, health concerns	Project Owner
Operation	Domestic wastewater	Project area	Visual inspection	Daily	To prevent soil and groundwater pollution	Project Owner

2.3. Implementation Plan

Implementation Plan is given below. Related responsible agency could be shown on the part 2.1 and part 2.2.

Subject	Before Construction	During Construction																						After Construction
		Years																						
		2010											2011											
Excavation wastes																								
Dust / air pollution																								
Noise																								
Exhaust																								
Solid wastes																								
Hazardous waste																								
Waste oil																								
Domestic wastewater																								
Medical waste (N/A)																								
Public Safety																								
Wild Life																								
Employment																								
Socio-Economy																								
Land management activities																								
Restoration of Construction Area																								

Subject	Before Construction	During Construction																							After Construction
		Years																							
		2012											2013												
Excavation wastes																									
Dust / air pollution																									
Noise																									
Exhaust																									
Solid wastes																									
Hazardous waste																									
Waste oil																									
Domestic wastewater																									
Medical waste (N/A)																									
Public Safety																									
Wild Life																									
Employment																									
Socio-Economy																									
Land management activities																									
Restoration of Construction Area																									

Subject	Before Construction	During Construction												After Construction
		Years												
		2014												
Excavation wastes														
Dust / air pollution														
Noise														
Exhaust														
Solid wastes														
Hazardous waste														
Waste oil														
Domestic wastewater														
Medical waste (N/A)														
Public Safety														
Wild Life														
Employment														
Socio-Economy														
Land management activities														
Restoration of Construction Area														

PROJECT SCHEDULE

1- LICENCE DATE	: 19 AUGUST 2010
2- LICENCE PERIOD	: 20 YEAR
3- END OF WORK DATE	: 19 AUGUST 2014
4- PRODUCTION DATE	: 02 AUGUST 2014

MENDERES GEOTHERMAL ELEKTRİK ÜRETİM A.Ş.

AYDIN - SALAVATLI

DORA -3 GEOTHERMAL POWER PLANT PROJECT
PROJECT SCHEDULE

ORDER NO:	WORKING GROUPS	Date Starting Date	Date Ending Date	Date % Percentage	Work Activity / State	2010 - AUGUST Week 1	Week 2	Week 3	Week 4	Week 5	2010 - SEPTEMBER Week 6	Week 7	Week 8	Week 9	2010 - OCTOBER Week 10	Week 11	Week 12	Week 13
A-	PRE-CONSTRUCTION PERIOD - 16 MONTH	19.08.2010	19.12.2011	100,00%	Planning													
					Realized													
1	ALTERNATIVE STUDIES of PLANT - ELECTRICITY CONNECTION and LOCATION LANDS of DRILLING	01.10.2010	01.12.2011	30,00%	Planning										0.492%	0.492%	0.492%	0.492%
					Realized										0.492%	0.492%	0.492%	0.492%
2	STUDIES of GEOPHYSICS-CSMAT- LOCATION DETERMINATION	01.09.2010	01.12.2011	35,00%	Planning						0.538%	0.538%	0.538%	0.538%	0.538%	0.538%	0.538%	0.538%
					Realized						0.538%	0.538%	0.538%	0.538%	0.538%	0.538%	0.538%	0.538%
3	MAP SURVEY STUDIES	01.12.2010	19.12.2011	20,00%	Planning													
					Realized													
4	EXPROPRIATION STUDIES	15.12.2010	15.08.2011	15,00%	Planning													
					Realized													
	TOTAL - COMPLETING PROJECT of PRE-CONSTRUCTION (ACCORDING TO WEEKS)	19.08.2010	19.12.2011	100,00%	Planning	0,000%	0,000%	0,000%	0,000%	0,000%	0,538%	0,538%	0,538%	0,538%	1,030%	1,030%	1,030%	1,030%
					Realized	0,000%	0,000%	0,000%	0,000%	0,000%	0,538%	0,538%	0,538%	0,538%	1,030%	1,030%	1,030%	1,030%
	TOTAL - COMPLETING PROJECT of PRE-CONSTRUCTION (GENERAL)	19.08.2010	19.12.2011	100,00%	Planning	0,000%	0,000%	0,000%	0,000%	0,000%	0,538%	1,077%	1,615%	2,154%	3,184%	4,214%	5,245%	6,275%
					Realized	0,000%	0,000%	0,000%	0,000%	0,000%	0,538%	1,077%	1,615%	2,154%	3,184%	4,214%	5,245%	6,275%
B-	CONSTRUCTION PERIOD- 32 MONTH	19.12.2011	19.08.2014	100,00%	Planning													
					Realized													
1	OPENING PRODUCTION and RE-INJECTION WELLS	15.01.2011	15.06.2012	20,00%	Planning													
					Realized													
2	TEST STUDIES AND REPORTS of PRODUCTION and RE-INJECTION WELLS	01.03.2011	15.07.2012	20,00%	Planning													
					Realized													
3	DESIGN STUDIES of BINARY PLANT	01.08.2011	15.12.2011	5,00%	Planning													
					Realized													
4	ORDER of PLANT	01.01.2012	01.06.2012	5,00%	Planning													
					Realized													
5	TRANSPORTATION and INSTALLATION of PLANT FABRICATION	01.06.2012	15.08.2013	15,00%	Planning													
					Realized													
6	ASSEMBLING OF PLANT	15.08.2013	15.03.2014	10,00%	Planning													
					Realized													
7	MECHANICAL-ELECTRICAL and AUTOMATION FABRICATON BETWEEN B.O.P. KUYUBAŞI and PLANT	01.06.2012	01.06.2013	15,00%	Planning													
					Realized													
8	FABRICATION of CONNECTION POINT of PLANT and SYSTEM	15.06.2011	15.06.2012	15,00%	Planning													
					Realized													
9	STUDIES of PERFORMANCE TESTS and TAKING INTO OPERATION	15.03.2014	15.08.2014	5,00%	Planning													
					Realized													
	TOTAL - COMPLETING CONSTRUCTION PERIOD (ACCORDING TO WEEKS)	19.12.2011	19.08.2014	100,00%	Planning	0.000%	0.000%	0.000%	0.000%	0.000%	0.000%	0.000%	0.000%	0.000%	0.000%	0.000%	0.000%	0.000%
					Realized	0.000%	0.000%	0.000%	0.000%	0.000%	0.000%	0.000%	0.000%	0.000%	0.000%	0.000%	0.000%	0.000%
	TOTAL - COMPLETING CONSTRUCTION PERIOD (GENERAL)	19.12.2011	19.08.2014	100,00%	Planning	0.000%	0.000%	0.000%	0.000%	0.000%	0.000%	0.000%	0.000%	0.000%	0.000%	0.000%	0.000%	0.000%
					Realized	0.000%	0.000%	0.000%	0.000%	0.000%	0.000%	0.000%	0.000%	0.000%	0.000%	0.000%	0.000%	0.000%

1- LICENCE DATE	: 19 AUGUST 2010
2- LICENCE PERIOD	: 20 YEAR
3- END OF WORK DATE	: 19 AUGUST 2014
4- PRODUCTION DATE	: 02 AUGUST 2014

MENDERES GEOTHERMAL ELEKTRİK ÜRETİM A.Ş.

AYDIN - SALAVATLI

DORA -3 GEOTHERMAL POWER PLANT PROJECT
PROJECT SCHEDULE

ORDER NO:	WORKING GROUPS	Date	Date	Date	Work	2010 - NOVEMBER					2010 - DECEMBER				2011 – JANUARY			
		Starting Date	Ending Date	% Percentage	Activity	Week	Week	Week	Week	Week	Week	Week	Week	Week	Week	Week	Week	Week
					State	14	15	16	17	18	19	20	21	22	23	24	25	26
A-	PRE-CONSTRUCTION PERIOD - 12 MONTH	19.08.2010	19.12.2011	100.00%	Planning													
					Realized													
1	ALTERNATIVE STUDIES of PLANT - ELECTRICITY CONNECTION and LOCATION LANDS of DRILLING	01.10.2010	01.12.2011	30,00%	Planning	0,492%	0,492%	0,492%	0,492%	0,492%	0,492%	0,492%	0,492%	0,492%	0,492%	0,492%	0,492%	0,492%
					Realized	0,492%	0,492%	0,492%	0,492%	0,492%	0,492%	0,492%	0,492%	0,492%	0,492%	0,492%	0,492%	0,492%
2	STUDIES of GEOPHYSICS-CSMAT- LOCATION DETERMINATION	01.09.2010	01.12.2011	35,00%	Planning	0,538%	0,538%	0,538%	0,538%	0,538%	0,538%	0,538%	0,538%	0,538%	0,538%	0,538%	0,538%	0,538%
					Realized	0,538%	0,538%	0,538%	0,538%	0,538%	0,538%	0,538%	0,538%	0,538%	0,538%	0,538%	0,538%	0,538%
3	MAP SURVEY STUDIES	01.12.2010	19.12.2011	20,00%	Planning						0,364%	0,364%	0,364%	0,364%	0,364%	0,364%	0,364%	0,364%
					Realized						0,364%	0,364%	0,364%	0,364%	0,364%	0,364%	0,364%	0,364%
4	EXPROPRIATION STUDIES	15.12.2010	15.08.2011	15,00%	Planning								0,441%	0,441%	0,441%	0,441%	0,441%	0,441%
					Realized								0,441%	0,441%	0,441%	0,441%	0,441%	0,441%
	TOTAL - COMPLETING PROJECT of PRE-CONSTRUCTION (ACCORDING TO WEEKS)	19.08.2010	19.12.2011	100,00%	Planning	1,030%	1,030%	1,030%	1,030%	1,030%	1,394%	1,394%	1,835%	1,835%	1,835%	1,835%	1,835%	1,835%
					Realized	1,030%	1,030%	1,030%	1,030%	1,030%	1,394%	1,394%	1,835%	1,835%	1,835%	1,835%	1,835%	1,835%
	TOTAL - COMPLETING PROJECT of PRE-CONSTRUCTION (GENERAL)	19.08.2010	19.12.2011	100,00%	Planning	7,305%	8,335%	9,366%	10,396%	11,426%	12,820%	14,214%	16,049%	17,884%	19,719%	21,554%	23,389%	25,224%
					Realized	7,305%	8,335%	9,366%	10,396%	11,426%	12,820%	14,214%	16,049%	17,884%	19,719%	21,554%	23,389%	25,224%
B-	CONSTRUCTION PERIOD- 24 MONTH	19.12.2011	19.08.2014	100,00%	Planning													
					Realized													
1	OPENING PRODUCTION and RE-INJECTION WELLS	15.01.2011	15.06.2012	20,00%	Planning													
					Realized													
2	TEST STUDIES AND REPORTS of PRODUCTION and RE-INJECTION WELLS	01.03.2011	15.07.2012	20,00%	Planning													
					Realized													
3	DESIGN STUDIES of BINARY PLANT	01.08.2011	15.12.2011	5,00%	Planning													
					Realized													
4	ORDER of PLANT	01.01.2012	01.06.2012	5,00%	Planning													
					Realized													
5	TRANSPORTATION and INSTALLATION of PLANT FABRICATION	01.06.2012	15.08.2013	15,00%	Planning													
					Realized													
6	ASSEMBLING OF PLANT	15.08.2013	15.03.2014	10,00%	Planning													
					Realized													
7	MECHANICAL-ELECTRICAL and AUTOMATION FABRICATON BETWEEN B.O.P. KUYUBAŞI and PLANTI	01.06.2012	01.06.2013	15,00%	Planning													
					Realized													
8	FABRICATION of CONNECTION POINT of PLANT and SYSTEM	15.06.2011	15.06.2012	15,00%	Planning													
					Realized													
9	STUDIES of PERFORMANCE TESTS and TAKING INTO OPERATION	15.03.2014	15.08.2014	5,00%	Planning													
					Realized													
TOTAL - COMPLETING CONSTRUCTION PERIOD (ACCORDING TO WEEKS)		19.12.2011	19.08.2014	100,00%	Planning	0.000%	0.000%	0.000%	0.000%	0.000%	0.000%	0.000%	0.000%	0.000%	0.000%	0.000%	0.000%	0.000%
					Realized	0.000%	0.000%	0.000%	0.000%	0.000%	0.000%	0.000%	0.000%	0.000%	0.000%	0.000%	0.000%	0.000%
TOTAL - COMPLETING CONSTRUCTION PERIOD (GENERAL)		19.12.2011	19.08.2014	100,00%	Planning	0.000%	0.000%	0.000%	0.000%	0.000%	0.000%	0.000%	0.000%	0.000%	0.000%	0.000%	0.000%	0.000%
					Realized	0.000%	0.000%	0.000%	0.000%	0.000%	0.000%	0.000%	0.000%	0.000%	0.000%	0.000%	0.000%	0.000%

1- LICENCE DATE	: 19 AUGUST 2010
2- LICENCE PERIOD	: 20 YEAR
3- END OF WORK DATE	: 19 AUGUST 2014
4- PRODUCTION DATE	: 02 AUGUST 2014

MENDERES GEOTHERMAL ELEKTRİK ÜRETİM A.Ş.

AYDIN - SALAVATLI

DORA -3 GEOTHERMAL POWER PLANT PROJECT
PROJECT SCHEDULE

ORDER NO:	WORKING GROUPS	Date Starting Date	Date Ending Date	Date % Percentage	Work Activity / State	2011 - FEBRUARY				2011 – MARCH					2011 – APRIL			
						Week 27	Week 28	Week 29	Week 30	Week 31	Week 32	Week 33	Week 34	Week 35	Week 36	Week 37	Week 38	Week 39
A-	PRE-CONSTRUCTION PERIOD – 12 MONTH	19.08.2010	19.12.2011	100.00%	Planning													
					Realized													
1	ALTERNATIVE STUDIES of PLANT – ELECTRICITY CONNECTION and LOCATION LANDS of DRILLING	01.10.2010	01.12.2011	30,00%	Planning													
					Realized													
2	STUDIES of GEOPHYSICS-CSMAT- LOCATION DETERMINATION	01.09.2010	01.12.2011	35,00%	Planning													
					Realized													
3	MAP SURVEY STUDIES	01.12.2010	19.12.2011	20,00%	Planning													
					Realized													
4	EXPROPRIATION STUDIES	15.12.2010	15.08.2011	15,00%	Planning													
					Realized													
	TOTAL – COMPLETING PROJECT of PRE-CONSTRUCTION (ACCORDING TO WEEKS)	19.08.2010	19.12.2011	100,00%	Planning	0,000%	0,000%	0,000%	0,000%	0,000%	0,000%	0,000%	0,000%	0,000%	0,000%	0,000%	0,000%	0,000%
					Realized	0,000%	0,000%	0,000%	0,000%	0,000%	0,000%	0,000%	0,000%	0,000%	0,000%	0,000%	0,000%	0,000%
	TOTAL – COMPLETING PROJECT of PRE-CONSTRUCTION (GENERAL)	19.08.2010	19.12.2011	100,00%	Planning	25,224%	25,224 %	25,224%	25,224%	25,224%	25,224%	25,224%	25,224%	25,224%	25,224%	25,224%	25,224%	25,224%
					Realized	25,224%	25,224 %	25,224%	25,224%	25,224%	25,224%	25,224%	25,224%	25,224%	25,224%	25,224%	25,224%	25,224%
B-	CONSTRUCTION PERIOD- 24 MONTH	19.12.2011	19.08.2014	100,00%	Planning													
					Realized													
1	OPENING PRODUCTION and RE-INJECTION WELLS	15.01.2011	15.06.2012	20,00%	Planning													
					Realized													
2	TEST STUDIES AND REPORTS of PRODUCTION and RE-INJECTION WELLS	01.03.2011	15.07.2012	20,00%	Planning													
					Realized													
3	DESIGN STUDIES of BINARY PLANT	01.08.2011	15.12.2011	5,00%	Planning													
					Realized													
4	ORDER of PLANT	01.01.2012	01.06.2012	5,00%	Planning													
					Realized													
5	TRANSPORTATION and INSTALLATION of PLANT FABRICATION	01.06.2012	15.08.2013	15,00%	Planning													
					Realized													
6	ASSEMBLING OF PLANT	15.08.2013	15.03.2014	10,00%	Planning													
					Realized													
7	MECHANICAL-ELECTRICAL and AUTOMATION FABRICATON BETWEEN B.O.P. KUYUBAŞI and PLANTI	01.06.2012	01.06.2013	15,00%	Planning													
					Realized													
8	FABRICATION of CONNECTION POINT of PLANT and SYSTEM	15.06.2011	15.06.2012	15,00%	Planning													
					Realized													
9	STUDIES of PERFORMANCE TESTS and TAKING INTO OPERATION	15.03.2014	15.08.2014	5,00%	Planning													
					Realized													
	TOTAL – COMPLETING CONSTRUCTION PERIOD (ACCORDING TO WEEKS)	19.12.2011	19.08.2014	100,00%	Planning	0.000%	0.000%	0.000%	0.000%	0.000%	0.000%	0.000%	0.000%	0.000%	0.000%	0.000%	0.000%	0.000%
					Realized	0.000%	0.000%	0.000%	0.000%	0.000%	0.000%	0.000%	0.000%	0.000%	0.000%	0.000%	0.000%	0.000%
	TOTAL – COMPLETING CONSTRUCTION PERIOD (GENERAL)	19.12.2011	19.08.2014	100,00%	Planning	0.000%	0.000%	0.000%	0.000%	0.000%	0.000%	0.000%	0.000%	0.000%	0.000%	0.000%	0.000%	0.000%
					Realized	0.000%	0.000%	0.000%	0.000%	0.000%	0.000%	0.000%	0.000%	0.000%	0.000%	0.000%	0.000%	0.000%

1- LICENCE DATE	: 19 AUGUST 2010
2- LICENCE PERIOD	: 20 YEAR
3- END OF WORK DATE	: 19 AUGUST 2014
4- PRODUCTION DATE	: 02 AUGUST 2014

MENDERES GEOTHERMAL ELEKTRİK ÜRETİM A.Ş.

AYDIN - SALAVATLI

DORA -3 GEOTHERMAL POWER PLANT PROJECT
PROJECT SCHEDULE

ORDER NO:	WORKING GROUPS	Date	Date	Date	Work	2011 - MAY					2011 - JUNE				2011 - JULY			
		Starting Date	Ending Date	%	Activity	Week	Week	Week	Week	Week	Week	Week	Week	Week	Week	Week	Week	Week
				Percentage	State	40	41	42	43	44	45	46	47	48	49	50	51	52
A-	PRE-CONSTRUCTION PERIOD - 12 MONTH	19.08.2010	19.12.2011	100.00%	Planning													
					Realized													
1	ALTERNATIVE STUDIES of PLANT - ELECTRICITY CONNECTION and LOCATION LANDS of DRILLING	01.10.2010	01.12.2011	30,00%	Planning													
					Realized													
2	STUDIES of GEOPHYSICS-CSMAT- LOCATION DETERMINATION	01.09.2010	01.12.2011	35,00%	Planning													
					Realized													
3	MAP SURVEY STUDIES	01.12.2010	19.12.2011	20,00%	Planning													
					Realized													
4	EXPROPRIATION STUDIES	15.12.2010	15.08.2011	15,00%	Planning													
					Realized													
	TOTAL - COMPLETING PROJECT of PRE-CONSTRUCTION (ACCORDING TO WEEKS)	19.08.2010	19.12.2011	100,00%	Planning	0,000%	0,000%	0,000%	0,000%	0,000%	0,000%	0,000%	0,000%	0,000%	0,000%	0,000%	0,000%	0,000%
					Realized	0,000%	0,000%	0,000%	0,000%	0,000%	0,000%	0,000%	0,000%	0,000%	0,000%	0,000%	0,000%	0,000%
	TOTAL - COMPLETING PROJECT of PRE-CONSTRUCTION (GENERAL)	19.08.2010	19.12.2011	100,00%	Planning	25,224 %	25,224 %	25,224%	25,224%	25,224%	25,224%	25,224%	25,224%	25,224%	25,224%	25,224%	25,224%	25,224%
					Realized	25,224 %	25,224 %	25,224%	25,224%	25,224%	25,224%	25,224%	25,224%	25,224%	25,224%	25,224%	25,224%	25,224%
B-	CONSTRUCTION PERIOD- 24 MONTH	19.12.2011	19.08.2014	100,00%	Planning													
					Realized													
1	OPENING PRODUCTION and RE-INJECTION WELLS	15.01.2011	15.06.2012	20,00%	Planning													
					Realized													
2	TEST STUDIES AND REPORTS of PRODUCTION and RE-INJECTION WELLS	01.03.2011	15.07.2012	20,00%	Planning													
					Realized													
3	DESIGN STUDIES of BINARY PLANT	01.08.2011	15.12.2011	5,00%	Planning													
					Realized													
4	ORDER of PLANT	01.01.2012	01.06.2012	5,00%	Planning													
					Realized													
5	TRANSPORTATION and INSTALLATION of PLANT FABRICATION	01.06.2012	15.08.2013	15,00%	Planning													
					Realized													
6	ASSEMBLING OF PLANT	15.08.2013	15.03.2014	10,00%	Planning													
					Realized													
7	MECHANICAL-ELECTRICAL and AUTOMATION FABRICATON BETWEEN B.O.P. KUYUBAŞI and PLANTI	01.06.2012	01.06.2013	15,00%	Planning													
					Realized													
8	FABRICATION of CONNECTION POINT of PLANT and SYSTEM	15.06.2011	15.06.2012	15,00%	Planning													
					Realized													
9	STUDIES of PERFORMANCE TESTS and TAKING INTO OPERATION	15.03.2014	15.08.2014	5,00%	Planning													
					Realized													
TOTAL - COMPLETING CONSTRUCTION PERIOD (ACCORDING TO WEEKS)		19.12.2011	19.08.2014	100,00%	Planning	0.000%	0.000%	0.000%	0.000%	0.000%	0.000%	0.000%	0.000%	0.000%	0.000%	0.000%	0.000%	0.000%
					Realized	0.000%	0.000%	0.000%	0.000%	0.000%	0.000%	0.000%	0.000%	0.000%	0.000%	0.000%	0.000%	0.000%
TOTAL - COMPLETING CONSTRUCTION PERIOD (GENERAL)		19.12.2011	19.08.2014	100,00%	Planning	0.000%	0.000%	0.000%	0.000%	0.000%	0.000%	0.000%	0.000%	0.000%	0.000%	0.000%	0.000%	0.000%
					Realized	0.000%	0.000%	0.000%	0.000%	0.000%	0.000%	0.000%	0.000%	0.000%	0.000%	0.000%	0.000%	0.000%

1- LICENCE DATE	: 19 AUGUST 2010
2- LICENCE PERIOD	: 20 YEAR
3- END OF WORK DATE	: 19 AUGUST 2014
4- PRODUCTION DATE	: 02 AUGUST 2014

MENDERES GEOTHERMAL ELEKTRİK ÜRETİM A.Ş.

AYDIN - SALAVATLI

DORA -3 GEOTHERMAL POWER PLANT PROJECT
PROJECT SCHEDULE

ORDER NO:	WORKING GROUPS	Date Starting Date	Date Ending Date	Date % Percentage	Work Activity / State	2011 - AUGUST					2011 - SEPTEMBER				2011 - OCTOBER			
						Week 1	Week 2	Week 3	Week 4	Week 5	Week 6	Week 7	Week 8	Week 9	Week 10	Week 11	Week 12	Week 13
A-	PRE-CONSTRUCTION PERIOD - 12 MONTH	19.08.2010	19.12.2011	100.00%	Planning													
					Realized													
1	ALTERNATIVE STUDIES of PLANT - ELECTRICITY CONNECTION and LOCATION LANDS of DRILLING	01.10.2010	01.12.2011	30,00%	Planning													
					Realized													
2	STUDIES of GEOPHYSICS-CSMAT- LOCATION DETERMINATION	01.09.2010	01.12.2011	35,00%	Planning													
					Realized													
3	MAP SURVEY STUDIES	01.12.2010	19.12.2011	20,00%	Planning													
					Realized													
4	EXPROPRIATION STUDIES	15.12.2010	15.08.2011	15,00%	Planning													
					Realized													
	TOTAL - COMPLETING PROJECT of PRE-CONSTRUCTION (ACCORDING TO WEEKS)	19.08.2010	19.12.2011	100,00%	Planning	0,000%	0,000%	0,000%	0,000%	0,000%	0,000%	0,000%	0,000%	0,000%	0,000%	0,000%	0,000%	0,000%
					Realized	0,000%	0,000%	0,000%	0,000%	0,000%	0,000%	0,000%	0,000%	0,000%	0,000%	0,000%	0,000%	0,000%
	TOTAL - COMPLETING PROJECT of PRE-CONSTRUCTION (GENERAL)	19.08.2010	19.12.2011	100,00%	Planning	25,224%	25,224%	25,224%	25,224%	25,224%	25,224%	25,224%	25,224%	25,224%	25,224%	25,224%	25,224%	25,224%
					Realized	25,224%	25,224%	25,224%	25,224%	25,224%	25,224%	25,224%	25,224%	25,224%	25,224%	25,224%	25,224%	25,224%
B-	CONSTRUCTION PERIOD- 24 MONTH	19.12.2011	19.08.2014	100,00%	Planning													
					Realized													
1	OPENING PRODUCTION and RE-INJECTION WELLS	15.01.2011	15.06.2012	20,00%	Planning													
					Realized													
2	TEST STUDIES AND REPORTS of PRODUCTION and RE-INJECTION WELLS	01.03.2011	15.07.2012	20,00%	Planning													
					Realized													
3	DESIGN STUDIES of BINARY PLANT	01.08.2011	15.12.2011	5,00%	Planning													
					Realized													
4	ORDER of PLANT	01.01.2012	01.06.2012	5,00%	Planning													
					Realized													
5	TRANSPORTATION and INSTALLATION of PLANT FABRICATION	01.06.2012	15.08.2013	15,00%	Planning													
					Realized													
6	ASSEMBLING OF PLANT	15.08.2013	15.03.2014	10,00%	Planning													
					Realized													
7	MECHANICAL-ELECTRICAL and AUTOMATION FABRICATON BETWEEN B.O.P. KUYUBAŞI and PLANTI	01.06.2012	01.06.2013	15,00%	Planning													
					Realized													
8	FABRICATION of CONNECTION POINT of PLANT and SYSTEM	15.06.2011	15.06.2012	15,00%	Planning													
					Realized													
9	STUDIES of PERFORMANCE TESTS and TAKING INTO OPERATION	15.03.2014	15.08.2014	5,00%	Planning													
					Realized													
	TOTAL - COMPLETING CONSTRUCTION PERIOD (ACCORDING TO WEEKS)	19.12.2011	19.08.2014	100,00%	Planning	0.000%	0.000%	0.000%	0.000%	0.000%	0.000%	0.000%	0.000%	0.000%	0.000%	0.000%	0.000%	0.000%
					Realized	0.000%	0.000%	0.000%	0.000%	0.000%	0.000%	0.000%	0.000%	0.000%	0.000%	0.000%	0.000%	0.000%
	TOTAL - COMPLETING CONSTRUCTION PERIOD (GENERAL)	19.12.2011	19.08.2014	100,00%	Planning	0.000%	0.000%	0.000%	0.000%	0.000%	0.000%	0.000%	0.000%	0.000%	0.000%	0.000%	0.000%	0.000%
					Realized	0.000%	0.000%	0.000%	0.000%	0.000%	0.000%	0.000%	0.000%	0.000%	0.000%	0.000%	0.000%	0.000%

1- LICENCE DATE	: 19 AUGUST 2010
2- LICENCE PERIOD	: 20 YEAR
3- END OF WORK DATE	: 19 AUGUST 2014
4- PRODUCTION DATE	: 02 AUGUST 2014

MENDERES GEOTHERMAL ELEKTRİK ÜRETİM A.Ş.

AYDIN - SALAVATLI

DORA -3 GEOTHERMAL POWER PLANT PROJECT
PROJECT SCHEDULE

ORDER NO:	WORKING GROUPS	Date Starting Date	Date Ending Date	Date % Percentage	Work Activity / State	2011 - NOVEMBER					2011 - DECEMBER				2012 - JANUARY				
						Week 14	Week 15	Week 16	Week 17	Week 18	Week 19	Week 20	Week 21	Week 22	Week 23	Week 24	Week 25	Week 26	Week 27
A-	PRE-CONSTRUCTION PERIOD - 12 MONTH	19.08.2010	19.12.2011	100.00%	Planning														
					Realized														
1	ALTERNATIVE STUDIES of PLANT - ELECTRICITY CONNECTION and LOCATION LANDS of DRILLING	01.10.2010	01.12.2011	30,00%	Planning														
					Realized														
2	STUDIES of GEOPHYSICS-CSMAT- LOCATION DETERMINATION	01.09.2010	01.12.2011	35,00%	Planning														
					Realized														
3	MAP SURVEY STUDIES	01.12.2010	19.12.2011	20,00%	Planning														
					Realized														
4	EXPROPRIATION STUDIES	15.12.2010	15.08.2011	15,00%	Planning														
					Realized														
	TOTAL - COMPLETING PROJECT of PRE-CONSTRUCTION (ACCORDING TO WEEKS)	19.08.2010	19.12.2011	100,00%	Planning	0,000%	0,000%	0,000%	0,000%	0,000%	0,000%	0,000%	0,000%						
					Realized	0,000%	0,000%	0,000%	0,000%	0,000%	0,000%	0,000%	0,000%						
	TOTAL - COMPLETING PROJECT of PRE-CONSTRUCTION (GENERAL)	19.08.2010	19.12.2011	100,00%	Planning	25,224%	25,224%	25,224%	25,224%	25,224 %	25,224%	25,224%	25,224%						
					Realized	25,224%	25,224%	25,224%	25,224%	25,224 %	25,224%	25,224%	25,224%						
B-	CONSTRUCTION PERIOD- 24 MONTH	19.12.2011	19.08.2014	100,00%	Planning														
					Realized														
1	OPENING PRODUCTION and RE-INJECTION WELLS	15.01.2011	15.06.2012	20,00%	Planning														
					Realized														
2	TEST STUDIES AND REPORTS of PRODUCTION and RE-INJECTION WELLS	01.03.2011	15.07.2012	20,00%	Planning														
					Realized														
3	DESIGN STUDIES of BINARY PLANT	01.08.2011	15.12.2011	5,00%	Planning														
					Realized														
4	ORDER of PLANT	01.01.2012	01.06.2012	5,00%	Planning														
					Realized														
5	TRANSPORTATION and INSTALLATION of PLANT FABRICATION	01.06.2012	15.08.2013	15,00%	Planning														
					Realized														
6	ASSEMBLING OF PLANT	15.08.2013	15.03.2014	10,00%	Planning														
					Realized														
7	MECHANICAL-ELECTRICAL and AUTOMATION FABRICATON BETWEEN B.O.P. KUYUBAŞI and PLANTI	01.06.2012	01.06.2013	15,00%	Planning														
					Realized														
8	FABRICATION of CONNECTION POINT of PLANT and SYSTEM	15.06.2011	15.06.2012	15,00%	Planning														
					Realized														
9	STUDIES of PERFORMANCE TESTS and TAKING INTO OPERATION	15.03.2014	15.08.2014	5,00%	Planning														
					Realized														
TOTAL - COMPLETING CONSTRUCTION PERIOD (ACCORDING TO WEEKS)		19.12.2011	19.08.2014	100,00%	Planning	0.000%	0.000%	0.000%	0.000%	0.000%	0.000%	0.000%	0.000%	0.000%	0.000%	0.000%	0.000%	0.000%	0.000%
					Realized	0.000%	0.000%	0.000%	0.000%	0.000%	0.000%	0.000%	0.000%	0.000%	0.000%	0.000%	0.000%	0.000%	0.000%
TOTAL - COMPLETING CONSTRUCTION PERIOD (GENERAL)		19.12.2011	19.08.2014	100,00%	Planning	0.000%	0.000%	0.000%	0.000%	0.000%	0.000%	0.000%	0.000%	0.000%	0.000%	0.000%	0.000%	0.000%	0.000%
					Realized	0.000%	0.000%	0.000%	0.000%	0.000%	0.000%	0.000%	0.000%	0.000%	0.000%	0.000%	0.000%	0.000%	0.000%

1- LICENCE DATE	: 19 AUGUST 2010
2- LICENCE PERIOD	: 20 YEAR
3- END OF WORK DATE	: 19 AUGUST 2014
4- PRODUCTION DATE	: 02 AUGUST 2014

MENDERES GEOTHERMAL ELEKTRİK ÜRETİM A.Ş.

AYDIN - SALAVATLI

DORA -3 GEOTHERMAL POWER PLANT PROJECT
PROJECT SCHEDULE

ORDER NO:	WORKING GROUPS	Date Starting Date	Date Ending Date	Date % Percentage	Work Activity / State	2012 – FEBRUARY Week 28	Week 29	Week 30	Week 31	2012 – MARCH Week 32	Week 33	Week 34	Week 35	2012 – APRIL Week 36	Week 37	Week 38	Week 39	Week 40
A-	PRE-CONSTRUCTION PERIOD - 12 MONTH	19.08.2010	19.12.2011	100.00%	Planning													
					Realized													
1	ALTERNATIVE STUDIES of PLANT - ELECTRICITY CONNECTION and LOCATION LANDS of DRILLING	01.10.2010	01.12.2011	30,00%	Planning													
					Realized													
2	STUDIES of GEOPHYSICS-CSMAT- LOCATION DETERMINATION	01.09.2010	01.12.2011	35,00%	Planning													
					Realized													
3	MAP SURVEY STUDIES	01.12.2010	19.12.2011	20,00%	Planning													
					Realized													
4	EXPROPRIATION STUDIES	15.12.2010	15.08.2011	15,00%	Planning													
					Realized													
	TOTAL - COMPLETING PROJECT of PRE-CONSTRUCTION (ACCORDING TO WEEKS)	19.08.2010	19.12.2011	100,00%	Planning													
					Realized													
	TOTAL - COMPLETING PROJECT of PRE-CONSTRUCTION (GENERAL)	19.08.2010	19.12.2011	100,00%	Planning													
					Realized													
B-	CONSTRUCTION PERIOD- 24 MONTH	19.12.2011	19.08.2014	100,00%	Planning													
					Realized													
1	OPENING PRODUCTION and RE-INJECTION WELLS	15.01.2011	15.06.2012	20,00%	Planning													
					Realized													
2	TEST STUDIES AND REPORTS of PRODUCTION and RE-INJECTION WELLS	01.03.2011	15.07.2012	20,00%	Planning													
					Realized													
3	DESIGN STUDIES of BINARY PLANT	01.08.2011	15.12.2011	5,00%	Planning													
					Realized													
4	ORDER of PLANT	01.01.2012	01.06.2012	5,00%	Planning													
					Realized													
5	TRANSPORTATION and INSTALLATION of PLANT FABRICATION	01.06.2012	15.08.2013	15,00%	Planning													
					Realized													
6	ASSEMBLING OF PLANT	15.08.2013	15.03.2014	10,00%	Planning													
					Realized													
7	MECHANICAL-ELECTRICAL and AUTOMATION FABRICATON BETWEEN B.O.P. KUYUBAŞI and PLANTI	01.06.2012	01.06.2013	15,00%	Planning													
					Realized													
8	FABRICATION of CONNECTION POINT of PLANT and SYSTEM	15.06.2011	15.06.2012	15,00%	Planning													
					Realized													
9	STUDIES of PERFORMANCE TESTS and TAKING INTO OPERATION	15.03.2014	15.08.2014	5,00%	Planning													
					Realized													
TOTAL - COMPLETING CONSTRUCTION PERIOD (ACCORDING TO WEEKS)		19.12.2011	19.08.2014	100,00%	Planning	0.000%	0.000%	0.000%	0.000%	0.000%	0.000%	0.000%	0.000%	0.000%	0.000%	0.000%	0.000%	0.000%
					Realized	0.000%	0.000%	0.000%	0.000%	0.000%	0.000%	0.000%	0.000%	0.000%	0.000%	0.000%	0.000%	0.000%
TOTAL - COMPLETING CONSTRUCTION PERIOD (GENERAL)		19.12.2011	19.08.2014	100,00%	Planning	0.000%	0.000%	0.000%	0.000%	0.000%	0.000%	0.000%	0.000%	0.000%	0.000%	0.000%	0.000%	0.000%
					Realized	0.000%	0.000%	0.000%	0.000%	0.000%	0.000%	0.000%	0.000%	0.000%	0.000%	0.000%	0.000%	0.000%

1- LICENCE DATE	: 19 AUGUST 2010
2- LICENCE PERIOD	: 20 YEAR
3- END OF WORK DATE	: 19 AUGUST 2014
4- PRODUCTION DATE	: 02 AUGUST 2014

MENDERES GEOTHERMAL ELEKTRİK ÜRETİM A.Ş.

AYDIN - SALAVATLI

DORA -3 GEOTHERMAL POWER PLANT PROJECT
PROJECT SCHEDULE

ORDER NO:	WORKING GROUPS	Date Starting Date	Date Ending Date	Date % Percentage	Work Activity / State	2012 – MAY Week 41	Week 42	Week 43	Week 44	2012 – JUNE Week 45	Week 46	Week 47	Week 48	2012 – JULY Week 49	Week 50	Week 51	Week 52
A-	**PRE-CONSTRUCTION PERIOD - 12 MONTH**	**19.08.2010**	**19.12.2011**	**100.00%**	Planning												
					Realized												
1	ALTERNATIVE STUDIES of PLANT - ELECTRICITY CONNECTION and LOCATION LANDS of DRILLING	01.10.2010	01.12.2011	30,00%	Planning												
					Realized												
2	STUDIES of GEOPHYSICS-CSMAT- LOCATION DETERMINATION	01.09.2010	01.12.2011	35,00%	Planning												
					Realized												
3	MAP SURVEY STUDIES	01.12.2010	19.12.2011	20,00%	Planning												
					Realized												
4	EXPROPRIATION STUDIES	15.12.2010	15.08.2011	15,00%	Planning												
					Realized												
	TOTAL - COMPLETING PROJECT of PRE-CONSTRUCTION (ACCORDING TO WEEKS)	**19.08.2010**	**19.12.2011**	**100,00%**	Planning												
					Realized												
	TOTAL - COMPLETING PROJECT of PRE-CONSTRUCTION (GENERAL)	**19.08.2010**	**19.12.2011**	**100,00%**	Planning												
					Realized												
B-	**CONSTRUCTION PERIOD- 24 MONTH**	**19.12.2011**	**19.08.2014**	**100,00%**	Planning												
					Realized												
1	OPENING PRODUCTION and RE-INJECTION WELLS	15.01.2011	15.06.2012	20,00%	Planning												
					Realized												
2	TEST STUDIES AND REPORTS of PRODUCTION and RE-INJECTION WELLS	01.03.2011	15.07.2012	20,00%	Planning												
					Realized												
3	DESIGN STUDIES of BINARY PLANT	01.08.2011	15.12.2011	5,00%	Planning												
					Realized												
4	ORDER of PLANT	01.01.2012	01.06.2012	5,00%	Planning												
					Realized												
5	TRANSPORTATION and INSTALLATION of PLANT FABRICATION	01.06.2012	15.08.2013	15,00%	Planning												
					Realized												
6	ASSEMBLING OF PLANT	15.08.2013	15.03.2014	10,00%	Planning												
					Realized												
7	MECHANICAL-ELECTRICAL and AUTOMATION FABRICATON BETWEEN B.O.P. KUYUBAŞI and PLANT	01.06.2012	01.06.2013	15,00%	Planning												
					Realized												
8	FABRICATION of CONNECTION POINT of PLANT and SYSTEM	15.06.2011	15.06.2012	15,00%	Planning												
					Realized												
	STUDIES of PERFORMANCE TESTS and TAKING INTO OPERATION	15.03.2014	15.08.2014	5,00%	Planning												
					Realized												
TOTAL - COMPLETING CONSTRUCTION PERIOD (ACCORDING TO WEEKS)		**19.12.2011**	**19.08.2014**	**100,00%**	Planning	0.000%	0.000%	0.000%	0.000%	0.000%	0.000%	0.000%	0.000%	0.000%	0.000%	0.000%	0.000%
					Realized	0.000%	0.000%	0.000%	0.000%	0.000%	0.000%	0.000%	0.000%	0.000%	0.000%	0.000%	0.000%
TOTAL - COMPLETING CONSTRUCTION PERIOD (GENERAL)		**19.12.2011**	**19.08.2014**	**100,00%**	Planning	0.000%	0.000%	0.000%	0.000%	0.000%	0.000%	0.000%	0.000%	0.000%	0.000%	0.000%	0.000%
					Realized	0.000%	0.000%	0.000%	0.000%	0.000%	0.000%	0.000%	0.000%	0.000%	0.000%	0.000%	0.000%

1- LICENCE DATE	: 19 AUGUST 2010
2- LICENCE PERIOD	: 20 YEAR
3- END OF WORK DATE	: 19 AUGUST 2014
4- PRODUCTION DATE	: 02 AUGUST 2014

MENDERES GEOTHERMAL ELEKTRİK ÜRETİM A.Ş.

AYDIN - SALAVATLI

DORA -3 GEOTHERMAL POWER PLANT PROJECT
PROJECT SCHEDULE

ORDER NO:	WORKING GROUPS	Date Starting Date	Date Ending Date	Date % Percentage	Work Activity / State	2012 – AUGUST					2012 - SEPTEMBER				2012 – OCTOBER			
						Week 1	Week 2	Week 3	Week 4	Week 5	Week 6	Week 7	Week 8	Week 9	Week 10	Week 11	Week 12	Week 13
A-	PRE-CONSTRUCTION PERIOD - 12 MONTH	19.08.2010	19.12.2011	100.00%	Planning													
					Realized													
1	ALTERNATIVE STUDIES of PLANT - ELECTRICITY CONNECTION and LOCATION LANDS of DRILLING	01.10.2010	01.12.2011	30,00%	Planning													
					Realized													
2	STUDIES of GEOPHYSICS-CSMAT- LOCATION DETERMINATION	01.09.2010	01.12.2011	35,00%	Planning													
					Realized													
3	MAP SURVEY STUDIES	01.12.2010	19.12.2011	20,00%	Planning													
					Realized													
4	EXPROPRIATION STUDIES	15.12.2010	15.08.2011	15,00%	Planning													
					Realized													
	TOTAL - COMPLETING PROJECT of PRE-CONSTRUCTION (ACCORDING TO WEEKS)	19.08.2010	19.12.2011	100,00%	Planning													
					Realized													
	TOTAL - COMPLETING PROJECT of PRE-CONSTRUCTION (GENERAL)	19.08.2010	19.12.2011	100,00%	Planning													
					Realized													
B-	CONSTRUCTION PERIOD- 24 MONTH	19.12.2011	19.08.2014	100,00%	Planning													
					Realized													
1	OPENING PRODUCTION and RE-INJECTION WELLS	15.01.2011	15.06.2012	20,00%	Planning													
					Realized													
2	TEST STUDIES AND REPORTS of PRODUCTION and RE-INJECTION WELLS	01.03.2011	15.07.2012	20,00%	Planning													
					Realized													
3	DESIGN STUDIES of BINARY PLANT	01.08.2011	15.12.2011	5,00%	Planning													
					Realized													
4	ORDER of PLANT	01.01.2012	01.06.2012	5,00%	Planning													
					Realized													
5	TRANSPORTATION and INSTALLATION of PLANT FABRICATION	01.06.2012	15.08.2013	15,00%	Planning													
					Realized													
6	ASSEMBLING OF PLANT	15.08.2013	15.03.2014	10,00%	Planning													
					Realized													
7	MECHANICAL-ELECTRICAL and AUTOMATION FABRICATON BETWEEN B.O.P. KUYUBAŞI and PLANTI	01.06.2012	01.06.2013	15,00%	Planning													
					Realized													
8	FABRICATION of CONNECTION POINT of PLANT and SYSTEM	15.06.2011	15.06.2012	15,00%	Planning													
					Realized													
9	STUDIES of PERFORMANCE TESTS and TAKING INTO OPERATION	15.03.2014	15.08.2014	5,00%	Planning													
					Realized													
TOTAL - COMPLETING CONSTRUCTION PERIOD (ACCORDING TO WEEKS)		19.12.2011	19.08.2014	100,00%	Planning	0.000%	0.000%	0.000%	0.000%	0.000%	0.000%	0.000%	0.000%	0.000%	0.000%	0.000%	0.000%	0.000%
					Realized	0.000%	0.000%	0.000%	0.000%	0.000%	0.000%	0.000%	0.000%	0.000%	0.000%	0.000%	0.000%	0.000%
TOTAL - COMPLETING CONSTRUCTION PERIOD (GENERAL)		19.12.2011	19.08.2014	100,00%	Planning	0.000%	0.000%	0.000%	0.000%	0.000%	0.000%	0.000%	0.000%	0.000%	0.000%	0.000%	0.000%	0.000%
					Realized	0.000%	0.000%	0.000%	0.000%	0.000%	0.000%	0.000%	0.000%	0.000%	0.000%	0.000%	0.000%	0.000%

1- LICENCE DATE	: 19 AUGUST 2010
2- LICENCE PERIOD	: 20 YEAR
3- END OF WORK DATE	: 19 AUGUST 2014
4- PRODUCTION DATE	: 02 AUGUST 2014

MENDERES GEOTHERMAL ELEKTRİK ÜRETİM A.Ş.

AYDIN - SALAVATLI

DORA -3 GEOTHERMAL POWER PLANT PROJECT
PROJECT SCHEDULE

ORDER NO:	WORKING GROUPS	Date Starting Date	Date Ending Date	Date % Percentage	Work Activity / State	2012 - NOVEMBER Week 14	Week 15	Week 16	Week 17	Week 18	2012 - DECEMBER Week 19	Week 20	Week 21	Week 22	2013 – JANUARY Week 23	Week 24	Week 25	Week 26
A-	PRE-CONSTRUCTION PERIOD - 12 MONTH	19.08.2010	19.12.2011	100.00%	Planning													
					Realized													
1	ALTERNATIVE STUDIES of PLANT - ELECTRICITY CONNECTION and LOCATION LANDS of DRILLING	01.10.2010	01.12.2011	30,00%	Planning													
					Realized													
2	STUDIES of GEOPHYSICS-CSMAT- LOCATION DETERMINATION	01.09.2010	01.12.2011	35,00%	Planning													
					Realized													
3	MAP SURVEY STUDIES	01.12.2010	19.12.2011	20,00%	Planning													
					Realized													
4	EXPROPRIATION STUDIES	15.12.2010	15.08.2011	15,00%	Planning													
					Realized													
	TOTAL - COMPLETING PROJECT of PRE-CONSTRUCTION (ACCORDING TO WEEKS)	19.08.2010	19.12.2011	100,00%	Planning													
					Realized													
	TOTAL - COMPLETING PROJECT of PRE-CONSTRUCTION (GENERAL)	19.08.2010	19.12.2011	100,00%	Planning													
					Realized													
B-	CONSTRUCTION PERIOD- 24 MONTH	19.12.2011	19.08.2014	100,00%	Planning													
					Realized													
1	OPENING PRODUCTION and RE-INJECTION WELLS	15.01.2011	15.06.2012	20,00%	Planning													
					Realized													
2	TEST STUDIES AND REPORTS of PRODUCTION and RE-INJECTION WELLS	01.03.2011	15.07.2012	20,00%	Planning													
					Realized													
3	DESIGN STUDIES of BINARY PLANT	01.08.2011	15.12.2011	5,00%	Planning													
					Realized													
4	ORDER of PLANT	01.01.2012	01.06.2012	5,00%	Planning													
					Realized													
5	TRANSPORTATION and INSTALLATION of PLANT FABRICATION	01.06.2012	15.08.2013	15,00%	Planning													
					Realized													
6	ASSEMBLING OF PLANT	15.08.2013	15.03.2014	10,00%	Planning													
					Realized													
7	MECHANICAL-ELECTRICAL and AUTOMATION FABRICATON BETWEEN B.O.P. KUYUBAŞI and PLANTI	01.06.2012	01.06.2013	15,00%	Planning													
					Realized													
8	FABRICATION of CONNECTION POINT of PLANT and SYSTEM	15.06.2011	15.06.2012	15,00%	Planning													
					Realized													
9	STUDIES of PERFORMANCE TESTS and TAKING INTO OPERATION	15.03.2014	15.08.2014	5,00%	Planning													
					Realized													
TOTAL - COMPLETING CONSTRUCTION PERIOD (ACCORDING TO WEEKS)		19.12.2011	19.08.2014	100,00%	Planning	0.000%	0.000%	0.000%	0.000%	0.000%	0.000%	0.000%	0.000%	0.000%	0.000%	0.000%	0.000%	0.000%
					Realized	0.000%	0.000%	0.000%	0.000%	0.000%	0.000%	0.000%	0.000%	0.000%	0.000%	0.000%	0.000%	0.000%
TOTAL - COMPLETING CONSTRUCTION PERIOD (GENERAL)		19.12.2011	19.08.2014	100,00%	Planning	0.000%	0.000%	0.000%	0.000%	0.000%	0.000%	0.000%	0.000%	0.000%	0.000%	0.000%	0.000%	0.000%
					Realized	0.000%	0.000%	0.000%	0.000%	0.000%	0.000%	0.000%	0.000%	0.000%	0.000%	0.000%	0.000%	0.000%

1- LICENCE DATE	: 19 AUGUST 2010
2- LICENCE PERIOD	: 20 YEAR
3- END OF WORK DATE	: 19 AUGUST 2014
4- PRODUCTION DATE	: 02 AUGUST 2014

MENDERES GEOTHERMAL ELEKTRİK ÜRETİM A.Ş.

AYDIN - SALAVATLI

DORA -3 GEOTHERMAL POWER PLANT PROJECT
PROJECT SCHEDULE

ORDER NO:	WORKING GROUPS	Date Starting Date	Date Ending Date	Date % Percentage	Work Activity / State	2013 – FEBRUARY Week 27	Week 28	Week 29	Week 30	2013 – MARCH Week 31	Week 32	Week 33	Week 34	Week 35	2013 – APRIL Week 36	Week 37	Week 38	Week 39
A-	PRE-CONSTRUCTION PERIOD - 12 MONTH	19.08.2010	19.12.2011	100.00%	Planning													
					Realized													
1	ALTERNATIVE STUDIES of PLANT - ELECTRICITY CONNECTION and LOCATION LANDS of DRILLING	01.10.2010	01.12.2011	30,00%	Planning													
					Realized													
2	STUDIES of GEOPHYSICS-CSMAT- LOCATION DETERMINATION	01.09.2010	01.12.2011	35,00%	Planning													
					Realized													
3	MAP SURVEY STUDIES	01.12.2010	19.12.2011	20,00%	Planning													
					Realized													
4	EXPROPRIATION STUDIES	15.12.2010	15.08.2011	15,00%	Planning													
					Realized													
	TOTAL - COMPLETING PROJECT of PRE-CONSTRUCTION (ACCORDING TO WEEKS)	19.08.2010	19.12.2011	100,00%	Planning													
					Realized													
	TOTAL - COMPLETING PROJECT of PRE-CONSTRUCTION (GENERAL)	19.08.2010	19.12.2011	100,00%	Planning													
					Realized													
B-	CONSTRUCTION PERIOD- 24 MONTH	19.12.2011	19.08.2014	100,00%	Planning													
					Realized													
1	OPENING PRODUCTION and RE-INJECTION WELLS	15.01.2011	15.06.2012	20,00%	Planning													
					Realized													
2	TEST STUDIES AND REPORTS of PRODUCTION and RE-INJECTION WELLS	01.03.2011	15.07.2012	20,00%	Planning													
					Realized													
3	DESIGN STUDIES of BINARY PLANT	01.08.2011	15.12.2011	5,00%	Planning													
					Realized													
4	ORDER of PLANT	01.01.2012	01.06.2012	5,00%	Planning													
					Realized													
5	TRANSPORTATION and INSTALLATION of PLANT FABRICATION	01.06.2012	15.08.2013	15,00%	Planning													
					Realized													
6	ASSEMBLING OF PLANT	15.08.2013	15.03.2014	10,00%	Planning													
					Realized													
7	MECHANICAL-ELECTRICAL and AUTOMATION FABRICATON BETWEEN B.O.P. KUYUBAŞI and PLANTI	01.06.2012	01.06.2013	15,00%	Planning													
					Realized													
8	FABRICATION of CONNECTION POINT of PLANT and SYSTEM	15.06.2011	15.06.2012	15,00%	Planning													
					Realized													
9	STUDIES of PERFORMANCE TESTS and TAKING INTO OPERATION	15.03.2014	15.08.2014	5,00%	Planning													
					Realized													
TOTAL - COMPLETING CONSTRUCTION PERIOD (ACCORDING TO WEEKS)		19.12.2011	19.08.2014	100,00%	Planning	0.000%	0.000%	0.000%	0.000%	0.000%	0.000%	0.000%	0.000%	0.000%	0.000%	0.000%	0.000%	0.000%
					Realized	0.000%	0.000%	0.000%	0.000%	0.000%	0.000%	0.000%	0.000%	0.000%	0.000%	0.000%	0.000%	0.000%
TOTAL - COMPLETING CONSTRUCTION PERIOD (GENERAL)		19.12.2011	19.08.2014	100,00%	Planning	0.000%	0.000%	0.000%	0.000%	0.000%	0.000%	0.000%	0.000%	0.000%	0.000%	0.000%	0.000%	0.000%
					Realized	0.000%	0.000%	0.000%	0.000%	0.000%	0.000%	0.000%	0.000%	0.000%	0.000%	0.000%	0.000%	0.000%

1- LICENCE DATE	: 19 AUGUST 2010
2- LICENCE PERIOD	: 20 YEAR
3- END OF WORK DATE	: 19 AUGUST 2014
4- PRODUCTION DATE	: 02 AUGUST 2014

MENDERES GEOTHERMAL ELEKTRİK ÜRETİM A.Ş.

AYDIN - SALAVATLI

DORA -3 GEOTHERMAL POWER PLANT PROJECT
PROJECT SCHEDULE

ORDER NO:	WORKING GROUPS	Date	Date	Date	Work	2013 – MAY					2013 – JUNE				2013 – JULY			
		Starting Date	Ending Date	%	Activity	Week	Week	Week	Week	Week	Week	Week	Week	Week	Week	Week	Week	Week
				Percentage	State	40	41	42	43	44	45	46	47	48	49	50	51	52
A-	PRE-CONSTRUCTION PERIOD - 12 MONTH	19.08.2010	19.12.2011	100.00%	Planning													
					Realized													
1	ALTERNATIVE STUDIES of PLANT - ELECTRICITY CONNECTION and LOCATION LANDS of DRILLING	01.10.2010	01.12.2011	30,00%	Planning													
					Realized													
2	STUDIES of GEOPHYSICS-CSMAT- LOCATION DETERMINATION	01.09.2010	01.12.2011	35,00%	Planning													
					Realized													
3	MAP SURVEY STUDIES	01.12.2010	19.12.2011	20,00%	Planning													
					Realized													
4	EXPROPRIATION STUDIES	15.12.2010	15.08.2011	15,00%	Planning													
					Realized													
	TOTAL - COMPLETING PROJECT of PRE-CONSTRUCTION (ACCORDING TO WEEKS)	19.08.2010	19.12.2011	100,00%	Planning													
					Realized													
	TOTAL - COMPLETING PROJECT of PRE-CONSTRUCTION (GENERAL)	19.08.2010	19.12.2011	100,00%	Planning													
					Realized													
B-	CONSTRUCTION PERIOD- 24 MONTH	19.12.2011	19.08.2014	100,00%	Planning													
					Realized													
1	OPENING PRODUCTION and RE-INJECTION WELLS	15.01.2011	15.06.2012	20,00%	Planning													
					Realized													
2	TEST STUDIES AND REPORTS of PRODUCTION and RE-INJECTION WELLS	01.03.2011	15.07.2012	20,00%	Planning													
					Realized													
3	DESIGN STUDIES of BINARY PLANT	01.08.2011	15.12.2011	5,00%	Planning													
					Realized													
4	ORDER of PLANT	01.01.2012	01.06.2012	5,00%	Planning													
					Realized													
5	TRANSPORTATION and INSTALLATION of PLANT FABRICATION	01.06.2012	15.08.2013	15,00%	Planning													
					Realized													
6	ASSEMBLING OF PLANT	15.08.2013	15.03.2014	10,00%	Planning													
					Realized													
7	MECHANICAL-ELECTRICAL and AUTOMATION FABRICATON BETWEEN B.O.P. KUYUBAŞI and PLANTI	01.06.2012	01.06.2013	15,00%	Planning													
					Realized													
8	FABRICATION of CONNECTION POINT of PLANT and SYSTEM	15.06.2011	15.06.2012	15,00%	Planning													
					Realized													
9	STUDIES of PERFORMANCE TESTS and TAKING INTO OPERATION	15.03.2014	15.08.2014	5,00%	Planning													
					Realized													
TOTAL - COMPLETING CONSTRUCTION PERIOD (ACCORDING TO WEEKS)		19.12.2011	19.08.2014	100,00%	Planning	0.000%	0.000%	0.000%	0.000%	0.000%	0.000%	0.000%	0.000%	0.000%	0.000%	0.000%	0.000%	0.000%
					Realized	0.000%	0.000%	0.000%	0.000%	0.000%	0.000%	0.000%	0.000%	0.000%	0.000%	0.000%	0.000%	0.000%
TOTAL - COMPLETING CONSTRUCTION PERIOD (GENERAL)		19.12.2011	19.08.2014	100,00%	Planning	0.000%	0.000%	0.000%	0.000%	0.000%	0.000%	0.000%	0.000%	0.000%	0.000%	0.000%	0.000%	0.000%
					Realized	0.000%	0.000%	0.000%	0.000%	0.000%	0.000%	0.000%	0.000%	0.000%	0.000%	0.000%	0.000%	0.000%

1- LICENCE DATE	: 19 AUGUST 2010
2- LICENCE PERIOD	: 20 YEAR
3- END OF WORK DATE	: 19 AUGUST 2014
4- PRODUCTION DATE	: 02 AUGUST 2014

MENDERES GEOTHERMAL ELEKTRİK ÜRETİM A.Ş.

AYDIN - SALAVATLI

DORA -3 GEOTHERMAL POWER PLANT PROJECT
PROJECT SCHEDULE

ORDER NO:	WORKING GROUPS	Date Starting Date	Date Ending Date	Date % Percentage	Work Activity / State	2013 – AUGUST					2013 – SEPTEMBER				2013 – OCTOBER			
						Week 1	Week 2	Week 3	Week 4	Week 5	Week 6	Week 7	Week 8	Week 9	Week 10	Week 11	Week 12	Week 13
A-	PRE-CONSTRUCTION PERIOD - 12 MONTH	19.08.2010	19.12.2011	100.00%	Planning													
					Realized													
1	ALTERNATIVE STUDIES of PLANT - ELECTRICITY CONNECTION and LOCATION LANDS of DRILLING	01.10.2010	01.12.2011	30,00%	Planning													
					Realized													
2	STUDIES of GEOPHYSICS-CSMAT- LOCATION DETERMINATION	01.09.2010	01.12.2011	35,00%	Planning													
					Realized													
3	MAP SURVEY STUDIES	01.12.2010	19.12.2011	20,00%	Planning													
					Realized													
4	EXPROPRIATION STUDIES	15.12.2010	15.08.2011	15,00%	Planning													
					Realized													
	TOTAL - COMPLETING PROJECT of PRE-CONSTRUCTION (ACCORDING TO WEEKS)	19.08.2010	19.12.2011	100,00%	Planning													
					Realized													
	TOTAL - COMPLETING PROJECT of PRE-CONSTRUCTION (GENERAL)	19.08.2010	19.12.2011	100,00%	Planning													
					Realized													
B-	CONSTRUCTION PERIOD- 24 MONTH	19.12.2011	19.08.2014	100,00%	Planning													
					Realized													
1	OPENING PRODUCTION and RE-INJECTION WELLS	15.01.2011	15.06.2012	20,00%	Planning													
					Realized													
2	TEST STUDIES AND REPORTS of PRODUCTION and RE-INJECTION WELLS	01.03.2011	15.07.2012	20,00%	Planning													
					Realized													
3	DESIGN STUDIES of BINARY PLANT	01.08.2011	15.12.2011	5,00%	Planning													
					Realized													
4	ORDER of PLANT	01.01.2012	01.06.2012	5,00%	Planning													
					Realized													
5	TRANSPORTATION and INSTALLATION of PLANT FABRICATION	01.06.2012	15.08.2013	15,00%	Planning													
					Realized													
6	ASSEMBLING OF PLANT	15.08.2013	15.03.2014	10,00%	Planning													
					Realized													
7	MECHANICAL-ELECTRICAL and AUTOMATION FABRICATON BETWEEN B.O.P. KUYUBAŞI and PLANTI	01.06.2012	01.06.2013	15,00%	Planning													
					Realized													
8	FABRICATION of CONNECTION POINT of PLANT and SYSTEM	15.06.2011	15.06.2012	15,00%	Planning													
					Realized													
9	STUDIES of PERFORMANCE TESTS and TAKING INTO OPERATION	15.03.2014	15.08.2014	5,00%	Planning													
					Realized													
TOTAL - COMPLETING CONSTRUCTION PERIOD (ACCORDING TO WEEKS)		19.12.2011	19.08.2014	100,00%	Planning	0.000%	0.000%	0.000%	0.000%	0.000%	0.000%	0.000%	0.000%	0.000%	0.000%	0.000%	0.000%	0.000%
					Realized	0.000%	0.000%	0.000%	0.000%	0.000%	0.000%	0.000%	0.000%	0.000%	0.000%	0.000%	0.000%	0.000%
TOTAL - COMPLETING CONSTRUCTION PERIOD (GENERAL)		19.12.2011	19.08.2014	100,00%	Planning	0.000%	0.000%	0.000%	0.000%	0.000%	0.000%	0.000%	0.000%	0.000%	0.000%	0.000%	0.000%	0.000%
					Realized	0.000%	0.000%	0.000%	0.000%	0.000%	0.000%	0.000%	0.000%	0.000%	0.000%	0.000%	0.000%	0.000%

1- LICENCE DATE	: 19 AUGUST 2010
2- LICENCE PERIOD	: 20 YEAR
3- END OF WORK DATE	: 19 AUGUST 2014
4- PRODUCTION DATE	: 02 AUGUST 2014

MENDERES GEOTHERMAL ELEKTRİK ÜRETİM A.Ş.

AYDIN - SALAVATLI

DORA -3 GEOTHERMAL POWER PLANT PROJECT
PROJECT SCHEDULE

ORDER NO:	WORKING GROUPS	Date	Date	Date	Work	2013 – NOVEMBER					2013 – DECEMBER					2014 – JANUARY				
		Starting Date	Ending Date	% Percentage	Activity	Week	Week	Week	Week	Week	Week	Week	Week	Week	Week	Week	Week	Week	Week	Week
					State	14	15	16	17	18	19	20	21	22	23	24	25	26	27	28
A-	PRE-CONSTRUCTION PERIOD - 12 MONTH	19.08.2010	19.12.2011	100.00%	Planning															
					Realized															
1	ALTERNATIVE STUDIES of PLANT - ELECTRICITY CONNECTION and LOCATION LANDS of DRILLING	01.10.2010	01.12.2011	30,00%	Planning															
					Realized															
2	STUDIES of GEOPHYSICS-CSMAT- LOCATION DETERMINATION	01.09.2010	01.12.2011	35,00%	Planning															
					Realized															
3	MAP SURVEY STUDIES	01.12.2010	19.12.2011	20,00%	Planning															
					Realized															
4	EXPROPRIATION STUDIES	15.12.2010	15.08.2011	15,00%	Planning															
					Realized															
	TOTAL - COMPLETING PROJECT of PRE-CONSTRUCTION (ACCORDING TO WEEKS)	19.08.2010	19.12.2011	100,00%	Planning															
					Realized															
	TOTAL - COMPLETING PROJECT of PRE-CONSTRUCTION (GENERAL)	19.08.2010	19.12.2011	100,00%	Planning															
					Realized															
B-	CONSTRUCTION PERIOD- 24 MONTH	19.12.2011	19.08.2014	100,00%	Planning															
					Realized															
1	OPENING PRODUCTION and RE-INJECTION WELLS	15.01.2011	15.06.2012	20,00%	Planning															
					Realized															
2	TEST STUDIES AND REPORTS of PRODUCTION and RE-INJECTION WELLS	01.03.2011	15.07.2012	20,00%	Planning															
					Realized															
3	DESIGN STUDIES of BINARY PLANT	01.08.2011	15.12.2011	5,00%	Planning															
					Realized															
4	ORDER of PLANT	01.01.2012	01.06.2012	5,00%	Planning															
					Realized															
5	TRANSPORTATION and INSTALLATION of PLANT FABRICATION	01.06.2012	15.08.2013	15,00%	Planning															
					Realized															
6	ASSEMBLING OF PLANT	15.08.2013	15.03.2014	10,00%	Planning															
					Realized															
7	MECHANICAL-ELECTRICAL and AUTOMATION FABRICATON BETWEEN B.O.P. KUYUBAŞI and PLANTI	01.06.2012	01.06.2013	15,00%	Planning															
					Realized															
8	FABRICATION of CONNECTION POINT of PLANT and SYSTEM	15.06.2011	15.06.2012	15,00%	Planning															
					Realized															
9	STUDIES of PERFORMANCE TESTS and TAKING INTO OPERATION	15.03.2014	15.08.2014	5,00%	Planning															
					Realized															
TOTAL - COMPLETING CONSTRUCTION PERIOD (ACCORDING TO WEEKS)		19.12.2011	19.08.2014	100,00%	Planning	0.000%	0.000%	0.000%	0.000%	0.000%	0.000%	0.000%	0.000%	0.000%	0.000%	0.000%	0.000%	0.000%	0.000%	0.000%
					Realized	0.000%	0.000%	0.000%	0.000%	0.000%	0.000%	0.000%	0.000%	0.000%	0.000%	0.000%	0.000%	0.000%	0.000%	0.000%
TOTAL - COMPLETING CONSTRUCTION PERIOD (GENERAL)		19.12.2011	19.08.2014	100,00%	Planning	0.000%	0.000%	0.000%	0.000%	0.000%	0.000%	0.000%	0.000%	0.000%	0.000%	0.000%	0.000%	0.000%	0.000%	0.000%
					Realized	0.000%	0.000%	0.000%	0.000%	0.000%	0.000%	0.000%	0.000%	0.000%	0.000%	0.000%	0.000%	0.000%	0.000%	0.000%

1- LICENCE DATE	: 19 AUGUST 2010
2- LICENCE PERIOD	: 20 YEAR
3- END OF WORK DATE	: 19 AUGUST 2014
4- PRODUCTION DATE	: 02 AUGUST 2014

MENDERES GEOTHERMAL ELEKTRİK ÜRETİM A.Ş.

AYDIN - SALAVATLI

DORA -3 GEOTHERMAL POWER PLANT PROJECT
PROJECT SCHEDULE

ORDER NO:	WORKING GROUPS	Date Starting Date	Date Ending Date	Date % Percentage	Work Activity / State	2014 – FEBRUARY				2014 – MARCH					2014 - APRIL				
						Week 29	Week 30	Week 31	Week 32	Week 33	Week 34	Week 35	Week 36	Week 37	Week 38	Week 39	Week 40	Week 41	Week 42
A-	PRE-CONSTRUCTION PERIOD - 12 MONTH	19.08.2010	19.12.2011	100.00%	Planning														
					Realized														
1	ALTERNATIVE STUDIES of PLANT - ELECTRICITY CONNECTION and LOCATION LANDS of DRILLING	01.10.2010	01.12.2011	30,00%	Planning														
					Realized														
2	STUDIES of GEOPHYSICS-CSMAT- LOCATION DETERMINATION	01.09.2010	01.12.2011	35,00%	Planning														
					Realized														
3	MAP SURVEY STUDIES	01.12.2010	19.12.2011	20,00%	Planning														
					Realized														
4	EXPROPRIATION STUDIES	15.12.2010	15.08.2011	15,00%	Planning														
					Realized														
	TOTAL - COMPLETING PROJECT of PRE-CONSTRUCTION (ACCORDING TO WEEKS)	19.08.2010	19.12.2011	100,00%	Planning														
					Realized														
	TOTAL - COMPLETING PROJECT of PRE-CONSTRUCTION (GENERAL)	19.08.2010	19.12.2011	100,00%	Planning														
					Realized														
B-	CONSTRUCTION PERIOD- 24 MONTH	19.12.2011	19.08.2014	100,00%	Planning														
					Realized														
1	OPENING PRODUCTION and RE-INJECTION WELLS	15.01.2011	15.06.2012	20,00%	Planning														
					Realized														
2	TEST STUDIES AND REPORTS of PRODUCTION and RE-INJECTION WELLS	01.03.2011	15.07.2012	20,00%	Planning														
					Realized														
3	DESIGN STUDIES of BINARY PLANT	01.08.2011	15.12.2011	5,00%	Planning														
					Realized														
4	ORDER of PLANT	01.01.2012	01.06.2012	5,00%	Planning														
					Realized														
5	TRANSPORTATION and INSTALLATION of PLANT FABRICATION	01.06.2012	15.08.2013	15,00%	Planning														
					Realized														
6	ASSEMBLING OF PLANT	15.08.2013	15.03.2014	10,00%	Planning														
					Realized														
7	MECHANICAL-ELECTRICAL and AUTOMATION FABRICATON BETWEEN B.O.P. KUYUBAŞI and PLANTI	01.06.2012	01.06.2013	15,00%	Planning														
					Realized														
8	FABRICATION of CONNECTION POINT of PLANT and SYSTEM	15.06.2011	15.06.2012	15,00%	Planning														
					Realized														
9	STUDIES of PERFORMANCE TESTS and TAKING INTO OPERATION	15.03.2014	15.08.2014	5,00%	Planning														
					Realized														
TOTAL - COMPLETING CONSTRUCTION PERIOD (ACCORDING TO WEEKS)		19.12.2011	19.08.2014	100,00%	Planning	0.000%	0.000%	0.000%	0.000%	0.000%	0.000%	0.000%	0.000%	0.000%	0.000%	0.000%	0.000%	0.000%	0.000%
					Realized	0.000%	0.000%	0.000%	0.000%	0.000%	0.000%	0.000%	0.000%	0.000%	0.000%	0.000%	0.000%	0.000%	0.000%
TOTAL - COMPLETING CONSTRUCTION PERIOD (GENERAL)		19.12.2011	19.08.2014	100,00%	Planning	0.000%	0.000%	0.000%	0.000%	0.000%	0.000%	0.000%	0.000%	0.000%	0.000%	0.000%	0.000%	0.000%	0.000%
					Realized	0.000%	0.000%	0.000%	0.000%	0.000%	0.000%	0.000%	0.000%	0.000%	0.000%	0.000%	0.000%	0.000%	0.000%

1- LICENCE DATE	: 19 AUGUST 2010
2- LICENCE PERIOD	: 20 YEAR
3- END OF WORK DATE	: 19 AUGUST 2014
4- PRODUCTION DATE	: 02 AUGUST 2014

MENDERES GEOTHERMAL ELEKTRİK ÜRETİM A.Ş.

AYDIN - SALAVATLI

DORA -3 GEOTHERMAL POWER PLANT PROJECT
PROJECT SCHEDULE

ORDER NO:	WORKING GROUPS	Date Starting Date	Date Ending Date	Date % Percentage	Work Activity / State	2014 - MAY					2014 – JUNE					2014 – JULY			
						Week 43	Week 44	Week 45	Week 46	Week 47	Week 48	Week 49	Week 50	Week 51	Week 52	Week 1	Week 2	Week 3	Week 4
A-	PRE-CONSTRUCTION PERIOD - 12 MONTH	19.08.2010	19.12.2011	100.00%	Planning														
					Realized														
1	ALTERNATIVE STUDIES of PLANT - ELECTRICITY CONNECTION and LOCATION LANDS of DRILLING	01.10.2010	01.12.2011	30,00%	Planning														
					Realized														
2	STUDIES of GEOPHYSICS-CSMAT- LOCATION DETERMINATION	01.09.2010	01.12.2011	35,00%	Planning														
					Realized														
3	MAP SURVEY STUDIES	01.12.2010	19.12.2011	20,00%	Planning														
					Realized														
4	EXPROPRIATION STUDIES	15.12.2010	15.08.2011	15,00%	Planning														
					Realized														
	TOTAL - COMPLETING PROJECT of PRE-CONSTRUCTION (ACCORDING TO WEEKS)	19.08.2010	19.12.2011	100,00%	Planning														
					Realized														
	TOTAL - COMPLETING PROJECT of PRE-CONSTRUCTION (GENERAL)	19.08.2010	19.12.2011	100,00%	Planning														
					Realized														
B-	CONSTRUCTION PERIOD- 24 MONTH	19.12.2011	19.08.2014	100,00%	Planning														
					Realized														
1	OPENING PRODUCTION and RE-INJECTION WELLS	15.01.2011	15.06.2012	20,00%	Planning														
					Realized														
2	TEST STUDIES AND REPORTS of PRODUCTION and RE-INJECTION WELLS	01.03.2011	15.07.2012	20,00%	Planning														
					Realized														
3	DESIGN STUDIES of BINARY PLANT	01.08.2011	15.12.2011	5,00%	Planning														
					Realized														
4	ORDER of PLANT	01.01.2012	01.06.2012	5,00%	Planning														
					Realized														
5	TRANSPORTATION and INSTALLATION of PLANT FABRICATION	01.06.2012	15.08.2013	15,00%	Planning														
					Realized														
6	ASSEMBLING OF PLANT	15.08.2013	15.03.2014	10,00%	Planning														
					Realized														
7	MECHANICAL-ELECTRICAL and AUTOMATION FABRICATON BETWEEN B.O.P. KUYUBAŞI and PLANTI	01.06.2012	01.06.2013	15,00%	Planning														
					Realized														
8	FABRICATION of CONNECTION POINT of PLANT and SYSTEM	15.06.2011	15.06.2012	15,00%	Planning														
					Realized														
9	STUDIES of PERFORMANCE TESTS and TAKING INTO OPERATION	15.03.2014	15.08.2014	5,00%	Planning														
					Realized														
TOTAL - COMPLETING CONSTRUCTION PERIOD (ACCORDING TO WEEKS)		19.12.2011	19.08.2014	100,00%	Planning	0.000%	0.000%	0.000%	0.000%	0.000%	0.000%	0.000%	0.000%	0.000%	0.000%	0.000%	0.000%	0.000%	0.000%
					Realized	0.000%	0.000%	0.000%	0.000%	0.000%	0.000%	0.000%	0.000%	0.000%	0.000%	0.000%	0.000%	0.000%	0.000%
TOTAL - COMPLETING CONSTRUCTION PERIOD (GENERAL)		19.12.2011	19.08.2014	100,00%	Planning	0.000%	0.000%	0.000%	0.000%	0.000%	0.000%	0.000%	0.000%	0.000%	0.000%	0.000%	0.000%	0.000%	0.000%
					Realized	0.000%	0.000%	0.000%	0.000%	0.000%	0.000%	0.000%	0.000%	0.000%	0.000%	0.000%	0.000%	0.000%	0.000%

1- LICENCE DATE	: 19 AUGUST 2010
2- LICENCE PERIOD	: 20 YEAR
3- END OF WORK DATE	: 19 AUGUST 2014
4- PRODUCTION DATE	: 02 AUGUST 2014

MENDERES GEOTHERMAL ELEKTRİK ÜRETİM A.Ş.

AYDIN - SALAVATLI

DORA -3 GEOTHERMAL POWER PLANT PROJECT
PROJECT SCHEDULE

ORDER NO:	WORKING GROUPS	Date Starting Date	Date Ending Date	Date % Percentage	Work Activity / State	2014 – AUGUST Week 5	Week 6	Week 7	Week 8	2014 - SEPTEMBER Week 9	Week 10	Week 11	Week 12
A-	PRE-CONSTRUCTION PERIOD - 12 MONTH	19.08.2010	19.12.2011	100.00%	Planning								
					Realized								
1	ALTERNATIVE STUDIES of PLANT - ELECTRICITY CONNECTION and LOCATION LANDS of DRILLING	01.10.2010	01.12.2011	30,00%	Planning								
					Realized								
2	STUDIES of GEOPHYSICS-CSMAT- LOCATION DETERMINATION	01.09.2010	01.12.2011	35,00%	Planning								
					Realized								
3	MAP SURVEY STUDIES	01.12.2010	19.12.2011	20,00%	Planning								
					Realized								
4	EXPROPRIATION STUDIES	15.12.2010	15.08.2011	15,00%	Planning								
					Realized								
	TOTAL - COMPLETING PROJECT of PRE-CONSTRUCTION (ACCORDING TO WEEKS)	19.08.2010	19.12.2011	100,00%	Planning								
					Realized								
	TOTAL - COMPLETING PROJECT of PRE-CONSTRUCTION (GENERAL)	19.08.2010	19.12.2011	100,00%	Planning								
					Realized								
B-	CONSTRUCTION PERIOD- 24 MONTH	19.12.2011	19.08.2014	100,00%	Planning								
					Realized								
1	OPENING PRODUCTION and RE-INJECTION WELLS	15.01.2011	15.06.2012	20,00%	Planning								
					Realized								
2	TEST STUDIES AND REPORTS of PRODUCTION and RE-INJECTION WELLS	01.03.2011	15.07.2012	20,00%	Planning								
					Realized								
3	DESIGN STUDIES of BINARY PLANT	01.08.2011	15.12.2011	5,00%	Planning								
					Realized								
4	ORDER of PLANT	01.01.2012	01.06.2012	5,00%	Planning								
					Realized								
5	TRANSPORTATION and INSTALLATION of PLANT FABRICATION	01.06.2012	15.08.2013	15,00%	Planning								
					Realized								
6	ASSEMBLING OF PLANT	15.08.2013	15.03.2014	10,00%	Planning								
					Realized								
7	MECHANICAL-ELECTRICAL and AUTOMATION FABRICATON BETWEEN B.O.P. KUYUBAŞI and PLANTI	01.06.2012	01.06.2013	15,00%	Planning								
					Realized								
8	FABRICATION of CONNECTION POINT of PLANT and SYSTEM	15.06.2011	15.06.2012	15,00%	Planning								
					Realized								
9	STUDIES of PERFORMANCE TESTS and TAKING INTO OPERATION	15.03.2014	15.08.2014	5,00%	Planning								
					Realized								
TOTAL - COMPLETING CONSTRUCTION PERIOD (ACCORDING TO WEEKS)		19.12.2011	19.08.2014	100,00%	Planning	0.000%	0.000%	0.000%	0.000%	0.000%	0.000%	0.000%	0.000%
					Realized	0.000%	0.000%	0.000%	0.000%	0.000%	0.000%	0.000%	0.000%
TOTAL - COMPLETING CONSTRUCTION PERIOD (GENERAL)		19.12.2011	19.08.2014	100,00%	Planning	0.000%	0.000%	0.000%	0.000%	0.000%	0.000%	0.000%	0.000%
					Realized	0.000%	0.000%	0.000%	0.000%	0.000%	0.000%	0.000%	0.000%

PROCESS FLOW

MENDERES GEOTHERMAL ELEKTRIK URETİM A.Ş.

DORA - 3 GPP 17 MWe x 2 = 34 MWe

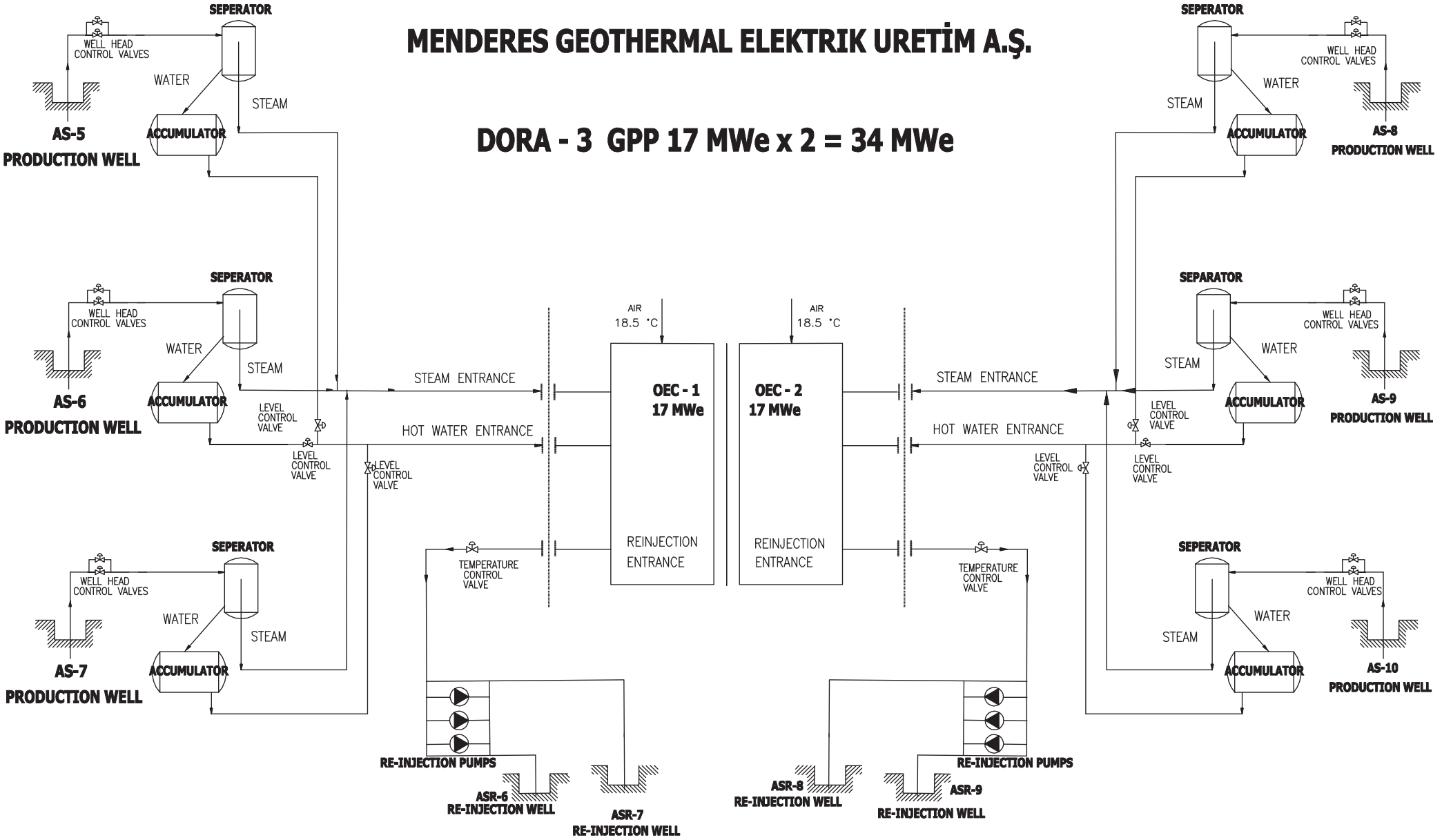

PUBLIC CONSULTATION

5. PUBLIC CONSULTATION

Invitation Announcement in Yavuzköy Village and Yeni Kıroba Newspaper: announcing the date, time, location and agenda for upcoming stakeholder consultation meeting for DORA-3 Geothermal Power Project in Yavuzköy, Köşk, Aydın on 28th of October 2011.

English Translation of announcement:
"**Announcement:** There will be an Assessment and Information Meeting Regarding DORA-3 Geothermal Power Project Which is planned to be developed by Menderes Geothermal Elektrik Üretim A.Ş near Yavuzköy of Köşk District in Aydın Province.

Place : Primary School of Yavuzköy, Köşk / Aydın
Date : On Friday, 28 October 2011
Time : 11:00

The stakeholder meeting was held on 28st of October 2011 in one of class of primary school in Yavuzköy village, Köşk / Aydın. At the meeting besides project developers, there were four representatives from local state institutions, many participants from the villages and head of the village. Although NGOs are proactively invited to the meeting and invited to deliver their comments, they have refrained to express comments and regret that they cannot participate in the meeting due to lack of staff.

The place of meeting was chosen to be the closest place to the project area and closest village which was Yavuzköy. All local people are informed about meeting in advance by local announcements. Additionally, one week before the meeting village mayor was visited and announcement of upcoming meeting was done.

Before presentation, agenda of the meeting and non-technical PDD was distributed to the participants for broader view. Project presentation and description was made by representative of FutureCamp Turkey and Aktif Çevre including information about project developers, the technology and operation of the power plant, estimated emission reduction amount of the plant, the importance of revenue from emission reduction and the project characteristics which makes this project different from other power plant projects in Turkey. Before passing to blind sustainable development exercise, question and comments were taken from participants about further clarification of project.

During and after presentation some questions were raised by participants, which were answered by project general Manager Mr. Haluk Tüfekçioğlu and the presenter. One of the most important topics raised during the meeting was whether it could be possible to benefit from hot geothermal fluid for agricultural purposes. Villagers demanded that in DORA-3 GPP, after using hot water, the fluid should be passed to local people for greenhouse production. The concern of local people was answered by the project developer if the demand from local people regarding usage of hot water comes in an organized demand than it can be discussed internally. However it should be clear that the project developer can supply hot geothermal fluid at some cost.

During the meeting, representative of local governmental institutions expressed their support for renewable energy project of DORA-3 GPP. While the project is in the planning phase, all feedbacks are important for better understanding of demand from local people.

Questions and comments raised by participants were addressed in assessment of the comments. The meeting was closed by a general support from participants.

Assessment of all comments and questions

Stakeholder comment and Questions	Explanation (Why? How?)
Representative from Agricultural Directorate of Aydın City: Do you have any concern to employee local people in the project?	It would be very much beneficial for project developer to employee local people for the project if their qualifications are met. However you know that this is not always possible, but priority will be given to Yavuzköy and local residents.
Representative from Agricultural Directorate of Aydın City: Does this project have already emission reduction certificates or you mean that this project will apply for it?	The work for having emission reduction certificates continues, and it will take more than two years to get the project registered. After project is commissioned than the certificates will be generated.
Representative from Agricultural Directorate of Aydın City: Does this project have any loss of heat? Or does this project cause heating of air?	As you can see from Dora-1 and Dora-2 all pipe lines carrying hot fluid are jacketed for isolation. This is logical for geothermal energy production, because we would like to benefit from hot fluid as possible as we can. As you can see from the presentation, geothermal fluid is used in a totally closed circuit. Thus, project contribution to heat the environment and air is minimized.
Representative from Agricultural Directorate of Aydın City: If I want to benefit from hot water as a farmer, would you provide me the hot fluid?	If villagers are organized to have greenhouse agricultural production and come to us with such of demand, then we can discuss this. And possibly we can provide.
Representative from Agricultural Directorate of Aydın City: But as far as I know it is not possible to re-inject hot fluid when it is colder that some Celsius, how are you going to provide farmers with geothermal fluid than?	As project developer we are also investing in greenhouses for agricultural production and it is possible to re-inject the fluid after usage in greenhouses.
Representative from Agricultural Directorate of Aydın City: Could you please tell us how much deep is the drilling wells?	It changes according to the geography of the area, for us it is between 1200 – 3000 metres.
Representative from Agricultural Directorate of Aydın City: One more question, how can you assure that underground water will not be mixed with geothermal fluids?	All the wells up to 900 metres are piped to prevent any mixtures. This is done to preserve geothermal fluid temperature and to prevent mixture of geothermal fluid in underground water.
Eyyup Derin: Why we are not working to build Yavuz village to Yavuz city benefiting from geothermal resources? For example to build a modern heating system for the houses in village which will reduce emission in the region?	You are so right in bringing your concerns for building a heating system for the village. As it is clear that project developer cannot initiate such system when there is no demand from local people as an organized structure. We cannot just provide one house with heating system, but when your village comes with a project then this can be discussed of course.

Evaluation forms

No:1

Name	**Dr. Engin Tan**
What is your impression of the meeting?	The meeting hall could have been better, but it is assumed that it has been chosen for easier local participation. Anyway the hall was used appropriately for the meeting
What do you like about the project?	It is very positive to hear that geothermal fluid will be re-injected in a binary cycle. Although the approach for farmers are weak till now, it is positive with new declarations as farmers. Most important thing is that the technology is foreigner, this should be reversed. Another positive approach could be heating of houses with geothermal fluid which gives more efficiency to the villagers.
What do you not like about the project?	Nothing

NO: 2

Name	**Galip Kışla**
What is your impression of the meeting?	Positive. It was an informing and enlightening meeting.
What do you like about the project?	Renewable energy, Benefit of the project is so much that cannot be counted.
What do you not like about the project?	Nothing

NO: 3

Name	**Okan Yavuz**
What is your impression of the meeting?	We thank a lot to the project developer for informing us about the project
What do you like about the project?	We are happy that they provide opportunities to us in sense of employment and repair of the village roads
What do you not like about the project?	Nothing

NO: 4

Name	**Serap Çıtak**
What is your impression of the meeting?	Presentation and responding of questions were positive
What do you like about the project?	Employment and support for greenhouses farming
What do you not like about the project?	Nothing

NO: 5

Name	**Erdal Saraçoğlu**
What is your impression of the meeting?	Presentation was informing.
What do you like about the project?	Harmless to the environment,

	Production of electricity that Turkey needs, Renewable energy,
What do you not like about the project?	Nothing

In total there were 19 original evaluation forms gathered in the meeting, but for the report 5 of them is translated and original copies are attached in Annex 4.

When it is gone through the evaluation forms, it becomes clear that there is a positive approach of local people for DORA-3 GPP. Besides being positive and supportive for the project, local people had expectations for possible use of geothermal fluid for agricultural and house heating usages. Another expectations of local people were employment of young generation in the project, which is also a concern of project developer.

25 EKİM 2011 SALI — YENİ KIROBA — 7

ADÜ AYDIN SAĞLIK YÜKSEKOKULU FAKÜLTELEŞME YOLUNDA İLERLİYOR

Adnan Menderes Üniversitesi (ADÜ) Aydın Sağlık Yüksekokulu, hemşirelik eğitimin her geçen gün gelişmesiyle kendini sürekli yeniliyor. 25 kişilik akademik, 29 kişilik idari personeli ile 475 öğrenciye eğitim veren ADÜ Aydın Sağlık Yüksekokulu, artan öğrenci talebine cevap verebilmek, daha nitelikli öğrencilerin tercih ettiği bir okul olabilmek ve hemşirelik eğitimi alanında daha çok söz sahibi olabilmek için fakülteleşme yolunda ilerliyor. Hemşirelik Fakültesi altında Hemşirelik Bölümünü, Sağlık Bilimleri Fakültesi altında ise Ebelik ve Beslenme ve Diyetetik bölümlerini toplamak isteyen Yüksekokul, bununla ilgili yasal düzenlemeleri hızla hayata geçiriyor.

Hemşirelik ve Sağlık Bilimleri Fakültesi açabilmek için üniversite hastanesinin olması ve lisansüstü eğitim veriliyor olması şartlarını taşıyan Yüksekokul, her ana bilim dalında en az üç öğretim üyesi olması şartını yerine getirmek içinse YÖK'ten kadro bekliyor.

Aydın Sağlık Yüksekokulu'nun verdiği uygulamalı eğitim ile dikkat çektiğini belirten Sağlık Yüksekokulu Müdürü Doç. Dr. Doç. Dr. Fatma Demirkıran, "Avrupa Birliği kriterlerine göre verilmesi gereken 4 bin 600 saatin yüzde 50'sinin uygulamalı eğitim olması şartına göre hareket eden Yüksekokulumuz, öğrencilerine ADÜ Uygulama ve Araştırma Hastanesi, Zübeyde Hanım Kadın Doğum ve Çocuk Hastalıkları Hastanesi, Aydın Devlet Hastanesi, Atatürk Devlet Hastanesi, Aydın İl Sağlık Müdürlüğü sağlık ocakları, Aydın Sosyal Hizmetler Kurumları, Aydın İl Milli Eğitim Müdürlüğü'nde uygulama yapma olanağı tanıyor. Bologna süreci kapsamında çok sayıda seçmeli dersi de eğitim programına dâhil eden Yüksekokulumuz, sosyal ve uzmanlık eğitimi veren dersleri ile öğrencilerini Avrupa standartlarında eğitim veriyor" dedi.

ADÜ Sağlık Yüksekokulu her öğrencisi için farklı bir uygulama yapıyor ve her öğrencisine edindikleri becerileri gösterir karne veriyor.

Bu karnelerde öğrencilerin aldıkları temik dersleri bunların ne kadarını uygulamalı olarak gördükleri, laboratuar çalışma esatleri ve eğitimleri boyunca ne tür becerileri edindikleri karnelerinde açıkça gözükliyor.

ADÜ Sağlık Yüksekokulu verdiği sertifikalı eğitimlerle öğrencilerinin mezun olduktan sonra bir adım ünde olmasına katkı sağlıyor. Yüksekokul yaklaşık on yıldır mezun olacak olan her Ebelik ve Hemşirelik öğrencisine, "Yeni Doğan Bebek Canlandırma" kursu veriyor. Eğitimi sertifikalandıran Yüksekokulun öğrencileri, Türkiye'nin her yerinde çalışabilecek bilgi ve donanımla mezun ediliyor. Yüksekokul, öğrencilerine "Temel Yaşam Desteği Eğitimi" de veriyor. Doğum becerileri kursu, fetal elektronik izlem kursu, gibi pek çok kurs da veren Sağlık Yüksekokulu, Halk Sağlığı Hemşireleri vasıtasıyla okullarda eğitim ve sağlık taraması da yapıyor. Önümüzdeki yıl belediye ile Yaşlı Zihin Geliştirme Merkezi için ortak çalışmalar yürütecek olan Sağlık Yüksekokulu, toplum sağlığını ilgilendiren her konuda üzerine düşeni titizlikle yerine getiriyor.

ADÜ Sağlık Yüksekokulu 2006 yılından bugüne yüksek lisans eğitimi de veriyor. İlk olarak Kadın Hastalıkları ve Doğum Hemşireliği, sonrasında Ruh Sağlığı ve Hastalıkları Hemşireliği alanında lisansüstü eğitim vermeye başlayan okul, alt ana bilim dalında lisansüstü eğitim veriyor. Her yıl lisansüstü eğitim verdiği ana bilim dalı sayısını artıran Okul, yeni eğitim öğretim döneminde İç Hastalıkları Hemşireliği ve Cerrahi Hastalıkları Hemşireliği Ana Bilim dallarında lisansüstü eğitim vermeye hazırlanıyor.

Formülüzle Üniversitesi ile de ortak Çocuk Sağlığı ve Hastalıkları Hemşireliği ve Hemşirelik Esasları Ana Bilim dalında lisansüstü eğitim programları yürüten Okul, Ebelik Bölümünde Ebelik Anabilim Dalı yüksek lisans programı da uygulayor.

Kadro sorunlarını aşıp YÖK'ün doktora programı açma kriterlerini tamamlamak için çalışan Yüksekokul, ilerde diğer üniversitelerle ortak doktora programları açmayı da amaçlıyor. (iha)

Atatürkçü Düşünce Derneği başkanları İncirliova'da toplandı

Aydın ve ilçelerindeki Atatürkçü Düşünce Derneği (ADD) başkanları İncirliova ilçesinde toplandı. Kültür Park'ta bir araya gelen ADD üyeleri gündemdeki konulan değerlendirdi. ADD İncirliova Şube Başkanı Muhittin Vardar, Atatürk devrim ve ilkelerini korumak için bir araya geldiklerini belirterek, şunları söyledi: "Atatürk'ün esenlerini yok etmek için uğrayan bu günlerde halkımızın dini duygularını sömürmek istidarlarını devam ettirme emelinde olan bu günkü istidar 1923 devrimine rövanşını almak için çabalıyor. İstidarın Atatürk'ün 1923 devrimini ekarte etmek istiyor ve ikinci bir Cumhuriyet kurma peşinde olduğunu söylemek istiyorum. Bölücü terör örgütü PKK tarafından her gün bir veya birkaç vatan evladı şehit ediliyor. En son 5 polis ve 24 askerimiz hunharca şehit edilmiştir. Yaşanan bu son olaylar halkımızın sabrını taşımıştır. Bir Atatürkçülere olan görev, içinde bulunduğumuz görev itibarı ile olumsuz koşullarda daha çok çaba göstermek halkın aydınlanması için elbirliği ile çalışmalıyız." (iha)

DUYURU

28/ 10 / 2011 Cuma Günü Dora-3 Jeotermal Enerji Santrali Projesi Hakkında Halkı Bilgilendirme Toplantısı Yapılacaktır. Yapılması Planlanan Toplantının Gündemi Aşağıdaki Gibidir:

- Toplantının açılışı
- Projenin Tanıtılması
- Projenin Çevresel Etkilerinin Sanabilmesi
- Proje Tanıtımı ile ilgili soruların alınması
- Projenin Sürdürülebilir Kalkınmaya Etki Değerlendirmesi
- Sürdürülebilir Kalkınmaya Etkilerin İzlenmesi
- Kapanış

İlgililerin toplantıya katılmasını rica ederiz.

Yer: Yavuzköy İlköğretim Okulu, Yavuzköy, Köşk/Aydın
Tarih: 28 Ekim 2011, Cuma
Saat: 11.00
Toplantıyı Düzenleyen Kuruluş:
Menderes Geothermal Elektrik Üretim A.Ş adına FutureCamp Türkiye ve Aktif Çevre
Tel: 0312 481 21 42 e-mail: info@futurecamp.com.tr
YK:550

AYDIN VE MANİSALI KADINLAR EL ELE VERDİ

Aydın Ticaret Borsası koordinatörlüğünde çalışmalarını sürdüren Aydın Kadın Girişimciler

kadın elinin değebilmesi için üzerimize düşen görevlerin farkına varmamız ve bu

yaşamları içinde sıkışmamızı, dışarıdaki hayatların içinde yer alması önemli bir

MUHTARLIK

MUHTARLIK
134A
DUYURU

TÜRKÇE'DEN İNGİLİZCE'YE TERCÜME
TRANSLATION FROM TURKISH TO ENGLISH

THE PUTTING UP THE NOTICE RECORD

The Environmental Management Plan/EIA/Project Information File that was prepared for DORA-3 GEOTHERMAL POWER PLANT PROJECT that has 2 x 17 MWe and has been done by MENDERES GEOTHERMAL POWER GENERATION INC.,has put up at ay YAVUZKÖY MUKHTARSHIP notice board to be given information about the Project to the local public until the deadline of the Project.

This record was prepared so as to determination of The Environmental Management Plan/EIA/Project Information File that was aforesaid.25/10/2011

Official Authority	Company
Cachet/Sealed/Signed	Cachet/Sealed/Signed

MENDERES GEOTHERMAL POWER GENERATION INC
(Cachet)

ENVIRONMENTAL MANAGEMENT PLAN/EIA/PROJECT INFORMATION FILE

1-This notice has to be put up at all mukhtarships within the scope of the Project.

2-This document is invalid without the approval of Official Authority (Mukhtarship/District Governorship/Provincial Department of Environment and Forestry).

3-This document's English translation that is done by a Sworn Translator should be sent to us.

İŞ BU TÜRKÇE'DEN İNGİLİZCE'YE TERCÜME İNGİLİZCE YEMİNLİ TERCÜMANI OLARAK TARAFIMDAN ASLINA UYGUN DOĞRU BİR ŞEKİLDE TERCÜME EDİLMİŞTİR.29.10.2011

YEMİNLİ TERCÜMAN
KADRİYE ARBAZ KABAOĞLU
MELİN TERCÜME BÜROSU
VEYSİ PAŞA MAH.
1623 SOK.NO:1 AYDIN-TURKEY

MELİN TERCÜME BÜROSU
Kadriye ARBAZ KABAOĞLU
TEL:0 256 214 10 04
VEYSİ PAŞA MH. 1623 SK. N.1 K.1 AYDIN
EFELER V.D. 230 803 360 50

THIS DOCUMENT WAS TRANSLATED FROM TURKISH TO ENGLISH TRULY ACCORDING TO THE ORIGINAL PAPER BY ME AS ENGLISH SWORN TRANSLATOR.29.10.2011

SWORN TRANSLATOR
KADRİYE ARBAZ KABAOĞLU
MELIN TRANSLATION OFFICE
VEYSI PASA DISTRICT
1623 road.No:1 AYDIN-TURKEY

MELİN TERCÜME BÜROSU
Kadriye ARBAZ KABAOĞLU
TEL:0 256 214 10 04
VEYSİ PAŞA MH. 1623 SK. N.1 K.1 AYDIN
EFELER V.D. 230 803 360 50

ÇEVRE YÖNETİM PLANI / ÇED / PROJE TANITIM DOSYASI
ASKI TUTANAĞI

MENDERES GEOTHERMAL ELEKTRİK ÜRETİM A.Ş. tarafından yapılmakta olan 2X17 MWe gücündeki DORA-3 JEOTERMAL ELEKTRİK SANTRALİ Projesi için hazırlanmış olan Çevre Yönetim Planı / ÇED / Proje Tanıtım Dosyası yöre halkının proje hakkında bilgi edinebilmesi için YAVUZKÖY KÖY MUHTARLIĞI ilan panosunda projenin bitim tarihine kadar askıda kalmak üzere askıya çıkarılmıştır.

İşbu tutanak anılan Çevre Yönetim Planın / ÇED'in / Proje Tanıtım Dosyasının askıya çıkarıldığına dair tespit amacı ile tutulmuştur. 25/10/2011

Resmi Makam

Mühür / Kaşe / İmza

Şirket

Kaşe / İmza

MENDERES GEOTHERMAL ELEKTRİK ÜRETİM A.Ş.

---

*Yapılacak olan ilanın **proje kapsamında olan tüm muhtarlıklarda** asılması gerekmektedir.
* Bu belge **Resmi Makam** (Muhtarlık / Kaymakamlık / Çevre ve Orman İl Müdürlüğü) onayı olmadan geçersizdir.
* Bu belgenin **Yeminli Tercüman** vasıtası ile İngilizce tercümesinin tarafımıza gönderilmesi gerekmektedir.

MELİN TERCÜME BÜROSU
Kadriye ARBAZ KARAOĞLU
TEL:0 256 214 10 04
VEYSİ PAŞA MH. 1523 SK. N.1 K.1 AYDIN
EFELER V.D. 230 803 360 50

TÜRKÇE'DEN İNGİLİZCE'YE TERCÜME
TRANSLATION FROM TURKISH TO ENGLISH

RECORD OF PUBLIC PARTICIPATION MEETING

There was done a meeting at 11.00 am. On 28/10/2011 at YAVUZKÖY PRIMARY SCHOOL by MENDERES GEOTHERMAL POWER GENERATION INC. so as to give information about the effects that will do and to take public's opinion in the area on DORA-3 GEOTHERMAL POWER PLANT project that is planned to be done in the area by MENDERES GEOTHERMAL POWER GENERATION INC. And has 2x17 MWe total installed capacity where will be done Aydın City,Köşk Town,within the bounderies of Yavuzköy village

MEETING PARTICIPANTS

If the participants are too many,an addition chart can be done.

Number	Name and Surname	Contact Phone Number	Signature
1	Köşk Food,Agriculture and Stockbreeding Directorate		
	Serap Çıtak	0505 880 84 82	(signed)
2	Member		
	Bülent Yavuz	0543 453 64 53	(signed)
3	Uysal Arslan	0533 301 33 15	(signed)
4	Okan Yavuz	0532 543 29 83	(signed)
5	Saffet özbay	0535 435 01 58	(signed)
6	Galip Kışla	0505 294 81 81	(signed)
7	Mustafa Hilmi Kocabaş	0545 618 25 82	(signed)
8	Timuçin Kocabaş	0536 460 38 51	(signed)
9	İbrahim Çetmen	0536 762 32 47	(signed)
10	Nevzat Bilgi	0543 841 30 36	(signed)
11	Kadir Dalama	0544 273 54 32	(signed)
12	Gürhan Çelik	0532 393 80 26	(signed)
13	Yaşar Kocabaş	0546 203 45 90	(signed)
14	Mehmet Yalçın	0256 211 30 00	(signed)
15	Hüseyin Demirbağ	0531 780 87 90	(signed)
16	Yüksel Sabancı	0543 453 03 79	(signed)
17	Engin Tan	0256 211 30 00/576	(signed)
18	Mehmet Eren	0505 311 32 51	(signed)
19	Erdal Saraçoğlu	0530 353 94 62	(signed)
20	Erol Tüfekçioğlu	0533 367 57 48	(signed)
21	Eyyüp Derin	0505 858 04 00	(signed)
22	Mustafa Ersin Siga	0530 353 94 60	(signed)
23	Gökhan Gökbel	0505 805 51 34	(signed)
24	Dilşad Koşar	0532 747 20 84	(signed)
25	Serçil Tokoğlu	0532 241 33 57	(signed)
26	Murat Haluk Tüfekçioğlu	0532 656 73 72	(signed)
27	Önder Aydın	0533 624 41 16	(signed)
28	Ekrem Özdeş(Active Environment)	0532 270 17 11	(signed)

MELİN TERCÜME
Kadriye ARBAZ KA
TEL:0 256 214 1
VEYSİ PAŞA MH. 1623 SK. N
EFELER/AYD. 230 80

Official Authority	Company	Subcontractor(s)
Cachet/Sealed/Signed	Cachet/Sealed/Signed	Cachet/Sealed/Signed

MENDERES GEOTHERMAL POWER GENERATION INC

(Cachet)

APPENDIX:RECORD OF MEETING
-Been explained of the Project by the Company
-Questions and Answers

---

*-This document is invalid without the approval of Official Authority (Mukhtarship/District Governorship/Provincial Department of Environment and Forestry).

*-This document's English translation that is done by a Sworn Translator should be sent to us.

İŞ BU TÜRKÇE'DEN İNGİLİZCE'YE TERCÜME İNGİLİZCE YEMİNLİ TERCÜMANI OLARAK TARAFIMDAN ASLINA UYGUN DOĞRU BİR ŞEKİLDE TERCÜME EDİLMİŞTİR.29.10.2011

YEMİNLİ TERCÜMAN
KADRİYE ARBAZ KABAOĞLU
MELİN TERCÜME BÜROSU
VEYSİ PAŞA MAH.
1623 SOK.NO:1 AYDIN-TURKEY

MELİN TERCÜME BÜROSU
Kadriye ARBAZ KABAOĞLU
TEL:0 256 214 10 04
VEYSİ PAŞA MH. 1623 SK. N.1 K.1 AYDIN
EFELER V.D. 230 803 360 50

THIS DOCUMENT WAS TRANSLATED FROM TURKISH TO ENGLISH TRULY ACCORDING TO THE ORIGINAL PAPER BY ME AS ENGLISH SWORN TRANSLATOR.29.10.2011

SWORN TRANSLATOR
KADRİYE ARBAZ KABAOĞLU
MELIN TRANSLATION OFFICE
VEYSI PASA DISTRICT
1623 road.No:1 AYDIN-TURKEY

MELİN TERCÜME BÜROSU
Kadriye ARBAZ KABAOĞLU
TEL:0 256 214 10 04
VEYSİ PAŞA MH. 1623 SK. N.1 K.1 AYDIN
EFELER V.D. 230 803 360 50

HALKIN KATILIMI TOPLANTISI TUTANAKLARI

Aydın İli Köşk İlçesi Yavuzköy köyü sınırları içerisinde MENDERES GEOTHERMAL ELEKTRİK ÜRETİM A.Ş. tarafından yapılması planlanan toplam kurulu gücü 2X17 MWe olan DORA-3 JEOTERMAL ELEKTRİK SANTRALİ Projesinde projenin yöre halkına ve çevreye yapacağı etkiler hakkında bilgi vermek ve yöre halkının görüşünü almak amacı ile 28/10/2011 tarihinde 11:00 saatinde YAVUZKÖY İLKÖĞRETİM OKULU adresinde MENDERES GEOTHERMAL ELEKTRİK ÜRETİM A.Ş. tarafından bir toplantı yapılmıştır.

TOPLANTIYA KATILANLAR:

*Toplantı katılımı tabloda ayrılan yerden fazla ise ek bir tablo yapılabilir.

No	Adı - Soyadı	İrtibat Telefonu	İmza
1	KÖŞK Ziraat Fırıncılık Hay. Müş. Cengiz ÇITAK	0505 880 54 52	
2	Aziz Bülent Tonca	0543 422 64 53	
3	Uysal Arslan	0533 301 33 15	
4	Ökkeş Yavuz	0532 543 24 83	
5	Saffet Yılmaz	0535 435 01 58	
6	Cengiz KISLA	0.505 294 81 81	
7	Mustafa Ulvi Kocabaş	0.545 618 25 32	
8	Timuçin Kocabaş	0536 460 28 51	
9	İbrahim GEMİCİ	0536 762 32 47	
10	Nevzat Bilgi	0.543 841 30 36	
11	Kadir Dalama	0544 273 54 32	
12	GÖKHAN ÇELİK	0532 593 80 26	
13	YAŞAR KOCABAŞ	0546 203 45 90	
14	Mehmet YALÇIN	0.256 111 3000	
15	Yüksel Damcıoğlu	0531 280 82 90	
16	Yüksel ŞAHİNCİ	0543 453 03 79	
17	Engin TAN	0256 211 30 00 / 1576	
18	Mehmet Ercan	0505 311 32 51	
19	Erdal SARAÇOĞLU	0530 353 94 62	
20	Erol Tüfekçioğlu	0533 361 57 48	
21	Ertuğ DERİN	0505 858 04 00	
22	Mustafa Ersin Sigli	0530 353 94 60	
23	Gökhan GÖKBEL	0505 865 31 34	

MELİN TERCÜME BÜROSU
Kadriye ARBAZ KABAOĞLU
TEL: 0256 214 10 04
VEYSİ PAŞA MH. 1623 SK. N.1 K.1 AYDIN
EFELER V.D. 230 803 360 50

MENDERES GEOTHERMAL ELEKTRİK ÜRETİM A.Ş.

No	Adı - Soyadı	İrtibat Telefonu	İmza
24	[illegible]	0532 [illegible]	[illegible]
25	Sergil Tokoğlu	0532 241 33 57	[illegible]
26	[illegible]	0532 656 73 72	[illegible]
27	Ondar Aylan	0533 624 4116	[illegible]
28	Ekrem ÖZDEŞ (Aktif Çevre)	0.532.270.17.11	[illegible]
29			
30			
31			
32			
33			
34			
35			
36			
37			
38			
39			
40			
41			
42			
43			
44			
45			

Resmi Makam
Mühür / Kaşe / İmza

Şirket
Kaşe / İmza

(Varsa) Alt Yüklenici(ler)
Kaşe / İmza

MENDERES GEOTHERMAL
ELEKTRİK ÜRETİM A.Ş
Adnan Menderes Mah.Muğla Karayolu [illegible] Apt.
No.7 Kat 1 D.1 AYDIN
Güzelhisar V.D. 394 014 1576

EK: TOPLANTI TUTANAĞI
- Şirket tarafından projenin anlatılması.
- Soru ve cevaplar.

* Bu belge **Resmi Makam** (Muhtarlık / Kaymakamlık / Çevre ve Orman İl Müdürlüğü) onayı olmadan geçersizdir.
* Bu belgenin **Yeminli Tercüman** vasıtası ile İngilizce tercümesinin tarafımıza gönderilmesi gerekmektedir

TKB-KDM1-CG-7 (tr) – 19 (ing)

MELİN TERCÜME BÜROSU
Kadriye ARBAZ KABAOĞLU
TEL:0 256 214 10 04
VEYSİ PAŞA MH. 1623 SK. N.1 K.1 AYDIN
EFELER V.D. 230 803 360 50

APPENDIX

ANKARA 33. NOTERLİĞİ
Ziya Gökalp Cad. No:16/6
Tel: 435 84 04-Y.Şehir/ANK.

28027

TÜRKÇE'DEN İNGİLİZCE'YE TERCÜME TRANSLATION FROM TURKISH TO ENGLISH

31 EKİM 2011

REPUBLIC OF TURKEY
MINISTRY OF ENVIRONMENT AND FORESTRY

REPUBLIC OF TURKEY
AYDIN GOVERNORSHIP
PROVINCIAL DEPARTMENT OF ENVIRONMENT AND FORESTRY

Date of Document: 16/04/2010
Number of Document: 2010/16

ENVIRONMENTAL IMPACT ASSESSMENT (EIA) CERTIFICATE

The EIA Regulation which came into force published in the Official Newspaper with the number of 26939 and with the date of 17.07.2008, in concern with " **2 x 17 MWe DORA-3 GEOTHERMAL ENERGY PRODUCTION PLANT"** Project that has been on the list of Appendix II ,the research and assessment was done and the precautions that are provided for environmental effects in the Project Information File, were found sufficient. Otherwise it was determined that there is no need to be prepared EIA Report, the aforesaid Project it was given " **Environmental Impact Assessment is not required** " by Our Governorship in accordance with 17 th article of EIA Regulations.

M. ZEKİ KOÇBERBER Behalf of Governor Deputy Governor
(Official sealed and signed)

Project Owner:Menderes Geothermal Electricity Production Inc. Place of the Project:Yavuzköy village Kuruçeşme Area Köşk/AYDIN

İŞBU BELGENİN ORİJİNAL TÜRKÇE METNİNDEN İNGİLİZCE'YE ÇEVRİLMİŞ OLDUĞUNU BEYAN EDERİM.
TERCÜMAN : ÖZGE ÖZGÜLER

SEKRETER BÜRO
TERCÜME ve TİC.LTD.ŞTİ.
TRANSLATION OFFICE
ÜBERSETZUNGSBÜRO
BUREAU DE TRADUCTION

İŞBU ÇEVİRİNİN DAİREMİZCE KİMLİĞİ SAKLI YEMİNLİ TERCÜMAN **ÖZGE ÖZGÜLER** TARAFINDAN TÜRKÇE'DEN İNGİLİZCE'YE ÇEVRİLMİŞ OLDUĞUNU ONAYLARIM.

T.C.
ANKARA 33.NOTERİ
KADİR SİNOPLU
YEMİNLİ MEMURU

T.C.
Çevre ve Orman
Bakanlığı

No 28027

T.C.
AYDIN VALİLİĞİ
İl Çevre ve Orman Müdürlüğü

Belge Tarihi: 16/04/2010
Belge No : **2010/16**

ÇEVRESEL ETKİ DEĞERLENDİRME BELGESİ

17.07.2008 tarih ve 26939 Sayılı Resmi Gazete'de yayınlanarak yürürlüğe giren ÇED Yönetmeliği'nin Ek-II listesinde yer alan **"2x17 MWe DORA-3 JEOTERMAL ENERJİ ÜRETİM SANTRALİ"** projesi ile ilgili olarak inceleme-değerlendirme yapılmış ve Proje Tanıtım Dosyasında çevresel etkilere karşı alınması öngörülen önlemler yeterli görülmüştür. Ayrıca ÇED Raporu hazırlanmasına gerek bulunmadığı tespit edilmiş olup, söz konusu projeye ÇED Yönetmeliğinin 17. Maddesi gereğince Valiliğimizce **"Çevresel Etki Değerlendirmesi Gerekli Değildir"** kararı verilmiştir.

SEKRETER BÜRO
TERCÜME ve TİC.LTD.ŞTİ.
TRANSLATION OFFICE
ÜBERSETZUNGSBÜRO
BUREAU DE TRADUCTION
Selanik Cad. 39/4 Kızılay/ANKARA
Tel/Fax:418 01 33-425 41 66-418 42 98

M.ZEKİ ÇÇBERBER
Valiya.
Vali Yardımcısı

Proje Sahibi : Menderes Geothermal Elektrik Üretim A.Ş.
Projenin Yeri: Yavuzköy Köyü Kuruçeşme Mevkii Köşk/AYDIN

GE Infrastructure
Water & Process Technologies

Version: 1 .0
Effective Date: 17/08/2007
Previous Date:

SAFETY DATA SHEET

SCALETROL PDC9332

1 IDENTIFICATION OF PREPARATION AND OF COMPANY

1.1 Identification of the substance or preparation
Product : SCALETROL PDC9332

1.2 Use of substance/preparation
Deposit control agent

1.3 Company/undertaking identification
GE Betz S.r.l.
Strada Consortile, 7
03013 FERENTINO (FR)
Tel : +39 07753911
e-mail : emea.productstewardship@ge.com

1.4 Emergency telephone
Centro Antiveleni Ospedale Niguarda

0039 0266101029
Milano

2 HAZARDS IDENTIFICATION

Important hazards

- Health/physical hazard	Not considered hazardous to health.
- Symptoms of exposure	Prolonged or repeated exposure may cause transient irritation.
- Environmental hazards	The product is not classified as dangerous for the environment.

3 COMPOSITION / INFORMATION ON INGREDIENTS

Chemical description
Phosphate and Phosphonate in water

Hazardous component(s)	EINECS/ELINCS #	CAS #	Conc.
None.			

4 FIRST AID MEASURES

Skin contact	Wash immediately with plenty of water.
Eye contact	Flush immediately with plenty of running water.
Inhalation	Remove to fresh air.
Ingestion	Rinse mouth with water.

5 FIRE-FIGHTING MEASURES

Extinguishing Media

- Suitable	Carbon dioxide, dry chemicals, foam, water spray (fog).
Special protective equipment for fire fighters	Self contained breathing apparatus. (CEN : EN 137) Protective clothing (CEN : EN 469) Protective gloves (CEN : EN 659) Helmet (CEN : EN 443)
Special exposure hazards	Oxides of carbon, nitrogen and phosphorus evolved in fire.

6 ACCIDENTAL RELEASE MEASURES

Personal precautions	Protective clothing Please refer also to section no. 8 'Exposure controls' for further information.
Environmental precautions	Prevent from entering sewers or the immediate environment. Accidental release of large quantities into the aquatic environment may harm aquatic organisms.

Methods for Cleaning Up

- on soil	Absorb onto inert material and dispose of according to Controlled Waste Regulations. Remove small spills with plenty of water.

7 HANDLING AND STORAGE

7.1 Handling	Normal chemical handling.
7.2 Storage	Store containers closed when not in use. Store in dry, cool, well ventilated area.
7.3 Specific use(s)	Only for professional and industrial users
Maximum storage stability (days)	720

8 EXPOSURE CONTROLS/PERSONAL PROTECTION

Exposure controls

- Recommended engineering controls	Ensure good ventilation.
- Respiratory protection	Not required.
- Hand protection	Protective gloves (Plastic, impervious) (Protection against unintentional short-term contact) CEN : EN 420
- Eye protection	Safety goggles. CEN : EN 166
- Skin protection	Protective clothing if splashing or repeated contact with product is likely. CEN : EN 340
- Environmental exposure controls	Prevent from entering in public sewers or the immediate environment.

9 PHYSICAL AND CHEMICAL PROPERTIES

9.1 General information

Appearance	Liquid

9.1 General information

Colour	Colourless to yellow
Odour	Slight

9.2 Important health, safety and environmental info

pH in aqueous solution	7,8 (5%)
Flash point (Pensky/Martens) (°C)	> 100
Explosive properties	Not applicable
Oxidising properties	Not classified as an oxidiser
Density at 20°C (kg/m3)	1413
Solubility in water (% weight)	Completely soluble
Viscosity at 20°C (mPas)	100
Vapour density (air=1)	<1
Evaporation rate (ether=1)	<1

9.3 Other information

Melting point, (°C)	-16
Pour point, (°C)	-13

10 STABILITY AND REACTIVITY

10.1 Conditions to avoid None known.

10.2 Materials to avoid Avoid contact with strong oxidisers.

10.3 Hazardous decomposition products Oxides of carbon, nitrogen and phosphorus evolved in fire.

11 TOXICOLOGICAL INFORMATION

Mammalian Test Data

- Oral LD50, rat (mg/kg)	> 2000 (estimated value)
- Dermal LD50, rabbit (mg/kg)	> 2000 (estimated value)

Exposure hazard

- Inhalation	Prolonged or repeated exposure may cause transient irritation.
- Skin contact	Prolonged or repeated contact may cause transient irritation.
- Eye contact	Prolonged or repeated contact may cause transient irritation.
- Ingestion	May cause slight gastrointestinal irritation.

12 ECOLOGICAL INFORMATION

Ecotoxicity

- Fathead minnow (mg/l)	NOEL : 5000 (Calculated data) 96 hour Acute Toxicity
- Daphnia Magna (mg/l)	LC50 : 2450 (Calculated data) NOEL : 1560 (Calculated data) 48 hour Acute Toxicity

Persistence and degradability

- COD (mgO2/g)	180 (calculated data)
- BOD 5 (mgO2/g)	0 (calculated data)
- BOD 28 (mgO2/g)	0 (calculated data)
- Closed Bottle Test (% Degradation in 28 days)	0 (calculated data)
- Zahn-Wellens Test (% Degradation in 28 days)	5 (calculated data)
- TOC (mg C/g)	60 (calculated data)

Summary The product is not classified as dangerous for the environment.

13 DISPOSAL CONSIDERATIONS

Disposal of product According to Controlled Waste Regulations.

EWC (European Waste Code) recommendation : 16 03 06
16 Wastes not otherwise specified in the list.
16 03 Off-specification batches and unused products.
16 03 06 Organic wastes
Depending on the origin and state of the waste, other EWC numbers may be applicable too.

Disposal of packaging According to Controlled Waste Regulations.

EWC (European Waste Code) recommendation : 15 01 02, 15 01 04
15 Waste packaging; absorbents, wiping cloths, filter materials and protective clothing not otherwise specified.
15 01 Packaging (including separately collected municipal packaging waste).
15 01 02 Plastic packaging.
15 01 04 Metallic packaging.
Depending on the origin and state of the waste, other EWC numbers may be applicable too.

14 TRANSPORT INFORMATION

Substance id.no. (SIN) (UN No.) Not applicable.

Correct shipping name Not applicable.

Land transport

- RID/ADR classification: Not classified under this legislation.

Maritime transport

- IMO-IMDG class	Not classified under this legislation

Air transport

- ICAO/IATA classification	Not classified under this legislation

15 REGULATORY INFORMATION

EEC labelling information

- Symbol(s)	None.
- R Phrase(s)	No Risk phrases assigned.
- S Phrase(s)	No Safety phrases assigned.
- EINECS number	All ingredients of this product are listed in EINECS or ELINCS, unless specifically exempted under the EEC Directive 67/548/EEC.

16 OTHER INFORMATION

Nature of revision	Correction in Section: 1,2,3,7,15
Based on EC Directive / Regulations	1999/45/EC 2001/58/EC 2001/118/EC (EC) No 1907/2006 (REACH)